Peter Rake's Big Dipper

Copyright P. Rake 2018

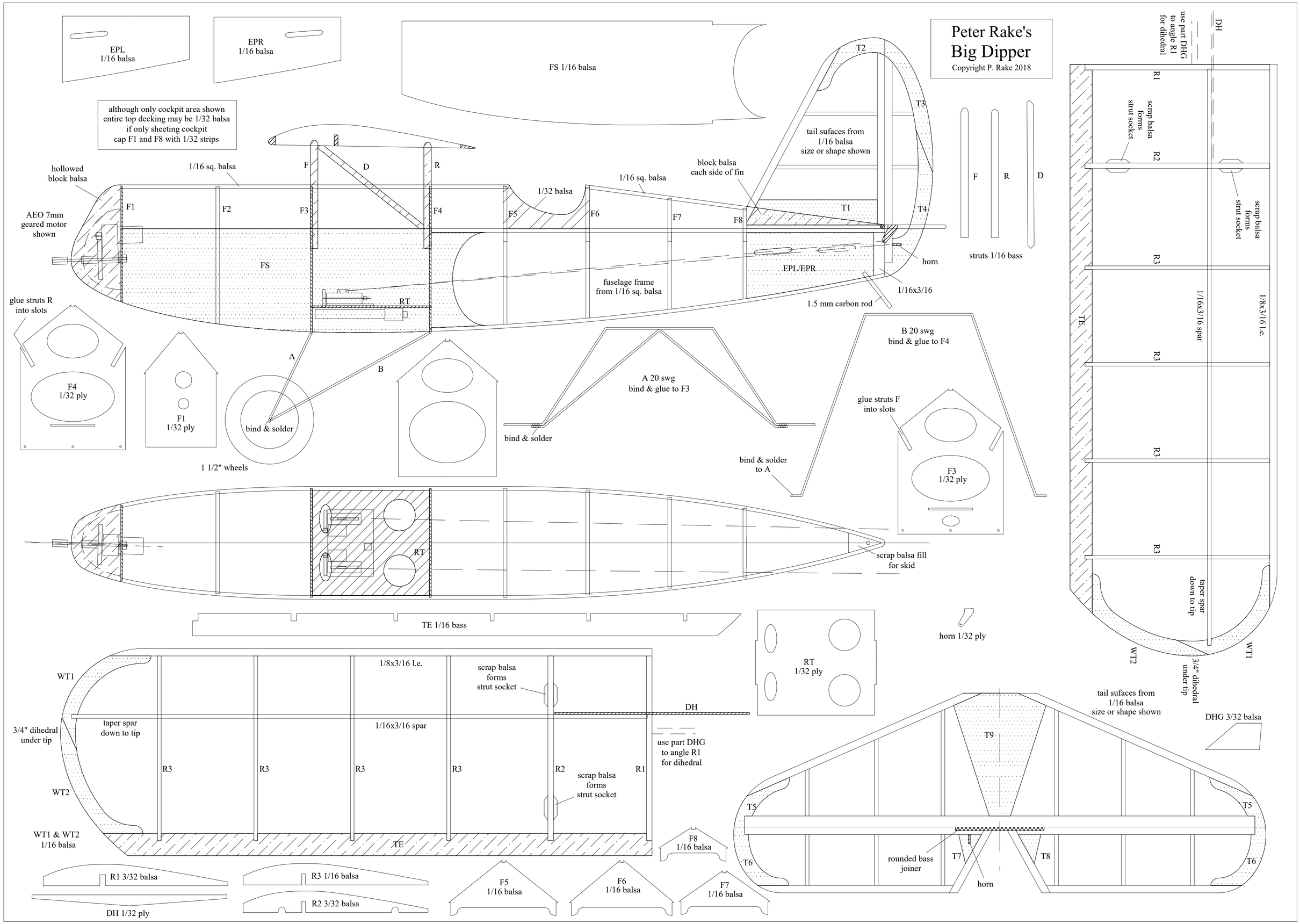

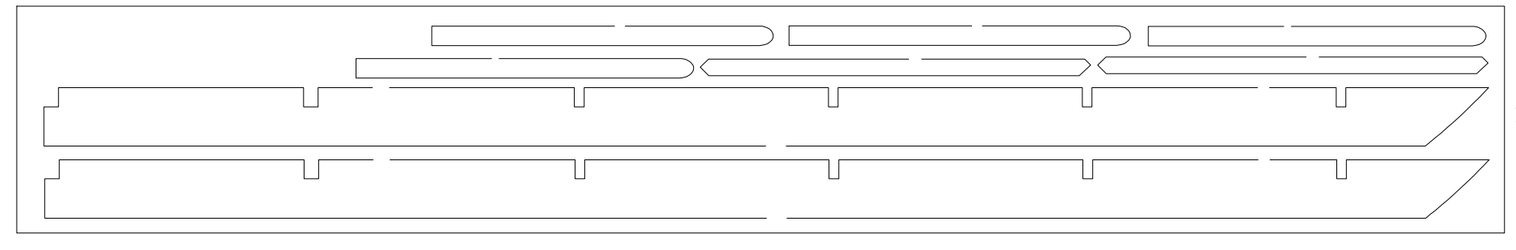

1/16 bass

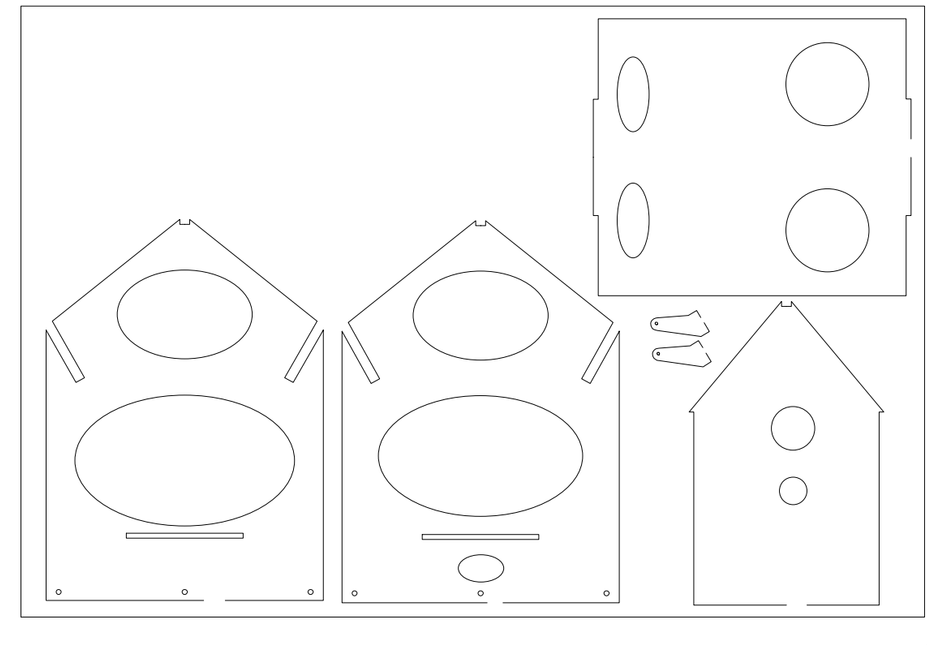

1/32 ply

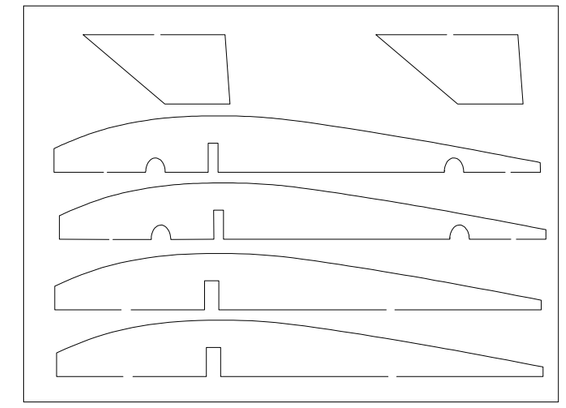

3/32 balsa

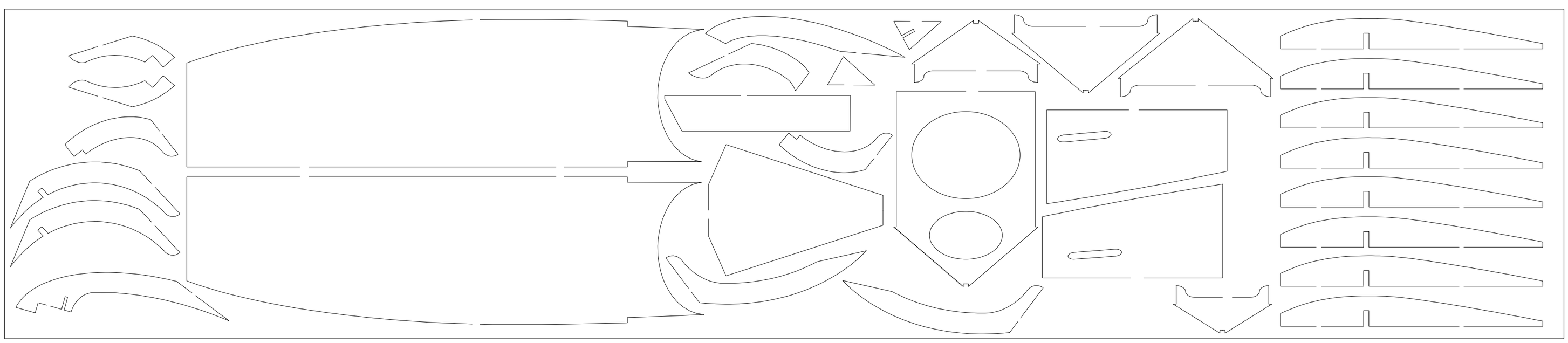

1/16 balsa