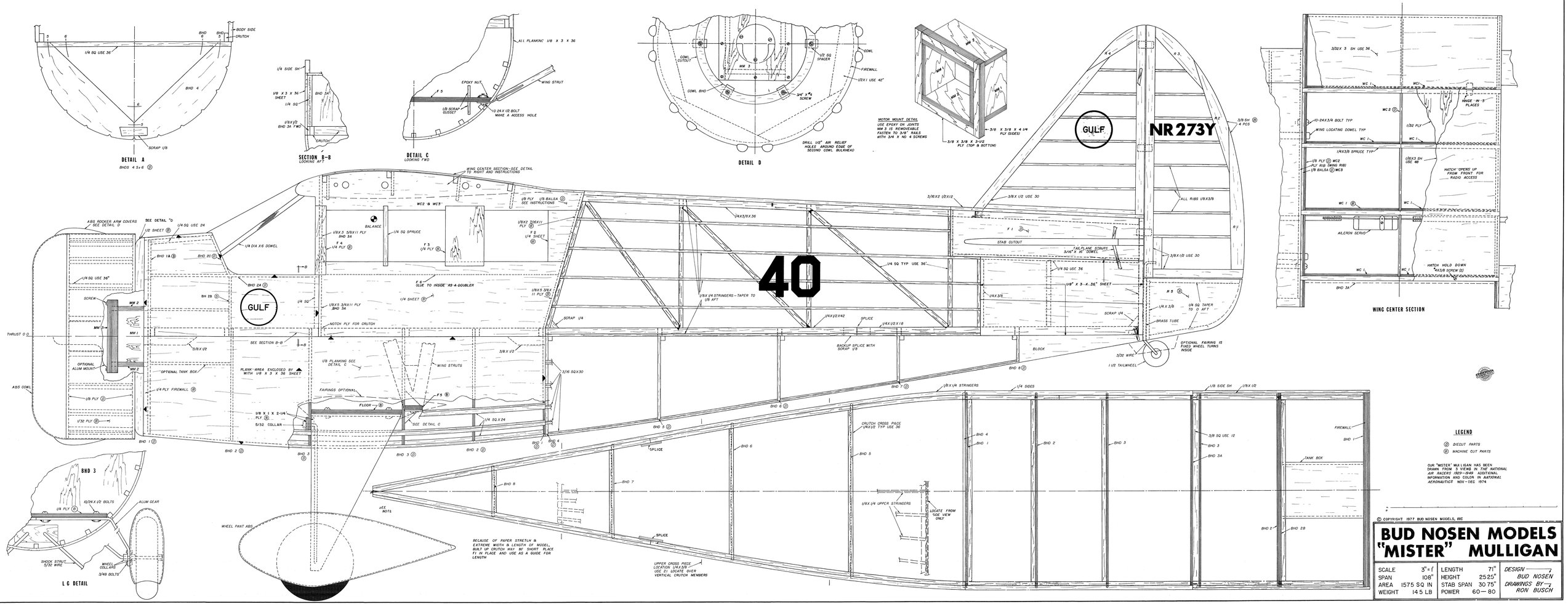
DETAIL A
BHDS 4 5 & 6
SECTION B-B
LOOKING AFT
DETAIL C
LOOKING FWD
DETAIL D
MOTOR MOUNT DETAIL
USE EPOXY ON JOINTS
MM 3 IS REMOVEABLE
FASTEN TO 3/8" RAILS
WITH 3/4 X #0 4 SCREWS
3/8 X 3/8 X 4 1/4 PLY (SIDES)
3/8 X 3/8 X 3-1/2 PLY (TOP & BOTTOM)
WING CENTER SECTION
HATCH "OPENS" UP FROM FRONT FOR RADIO ACCESS
HATCH HOLD DOWN
4X3/8 SCREW (2)
AILERON SERVO
L G DETAIL
BHD 3
WHEEL PANT ABS
BECAUSE OF PAPER STRETCH & EXTREME WIDTH & LENGTH OF MODEL, BUILT UP CRUTCH MAY BE SHORT. PLACE F1 IN PLACE AND USE AS A GUIDE FOR LENGTH
UPPER CROSS PIECE LOCATION 1/8X3/8 USE 21 LOCATE OVER VERTICAL CRUTCH MEMBERS
LOCATE FROM SIDE VIEW ONLY
GULF
NR 273Y
40
LEGEND
DIECUT PARTS
MACHINE CUT PARTS
OUR "MISTER" MULLIGAN HAS BEEN DRAWN FROM 3 VIEWS IN THE NATIONAL AIR RACERS 1929-1949 ADDITIONAL INFORMATION AND COLOR IN NATIONAL AERONAUTICS NOV-DEC 1974
© COPYRIGHT 1977 BUD NOSEN MODELS, INC
BUD NOSEN MODELS
"MISTER" MULLIGAN
SCALE 3" = 1'
SPAN 108"
AREA 1575 SQ IN
WEIGHT 145 LB
LENGTH 71"
HEIGHT 252.5"
STAB SPAN 30.75"
POWER 60 — 80
DESIGN BUD NOSEN
DRAWINGS BY RON BUSCH

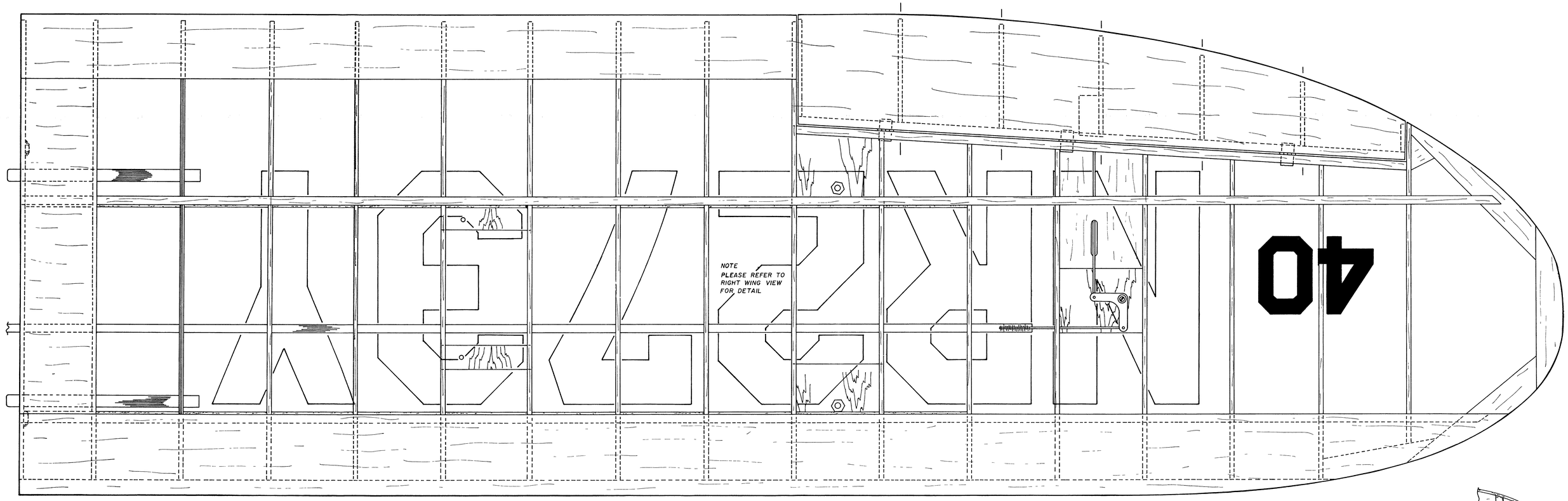

LEFT WING

WING HAS 0° DIHEDRAL

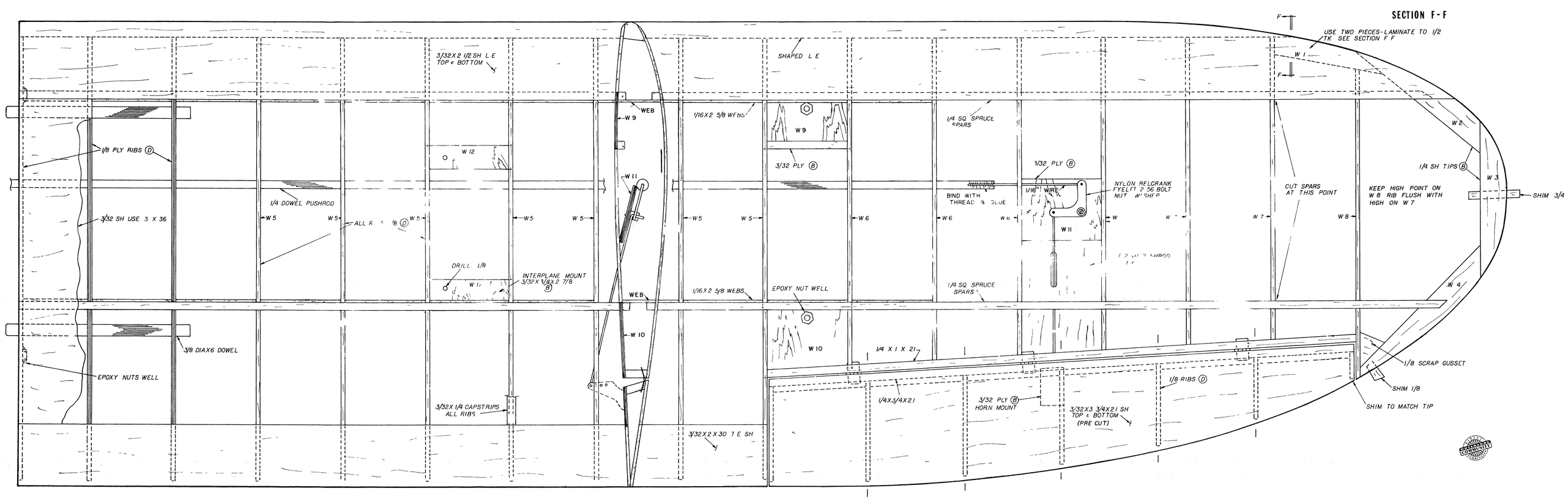

RIGHT WING

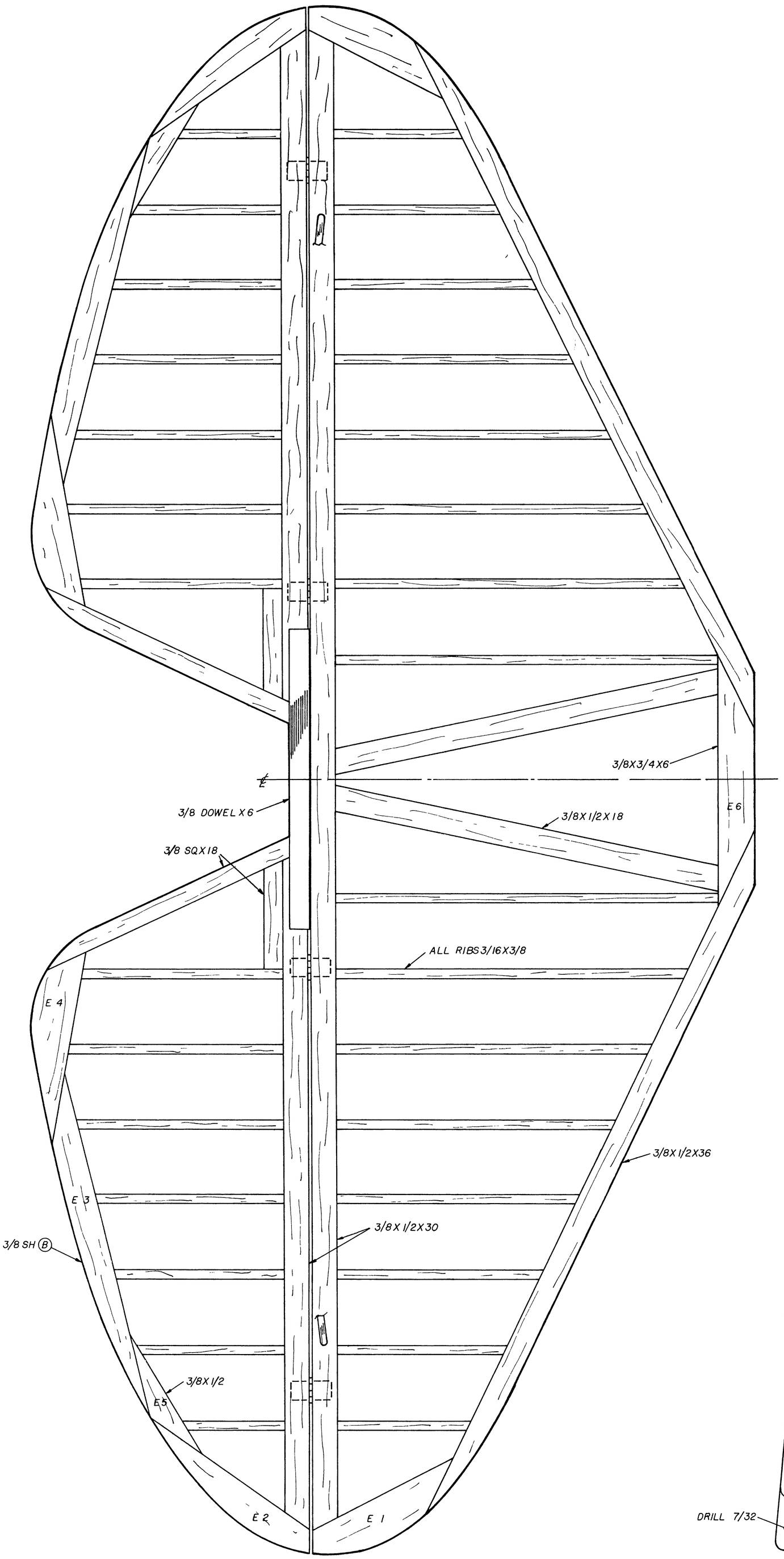

STAB

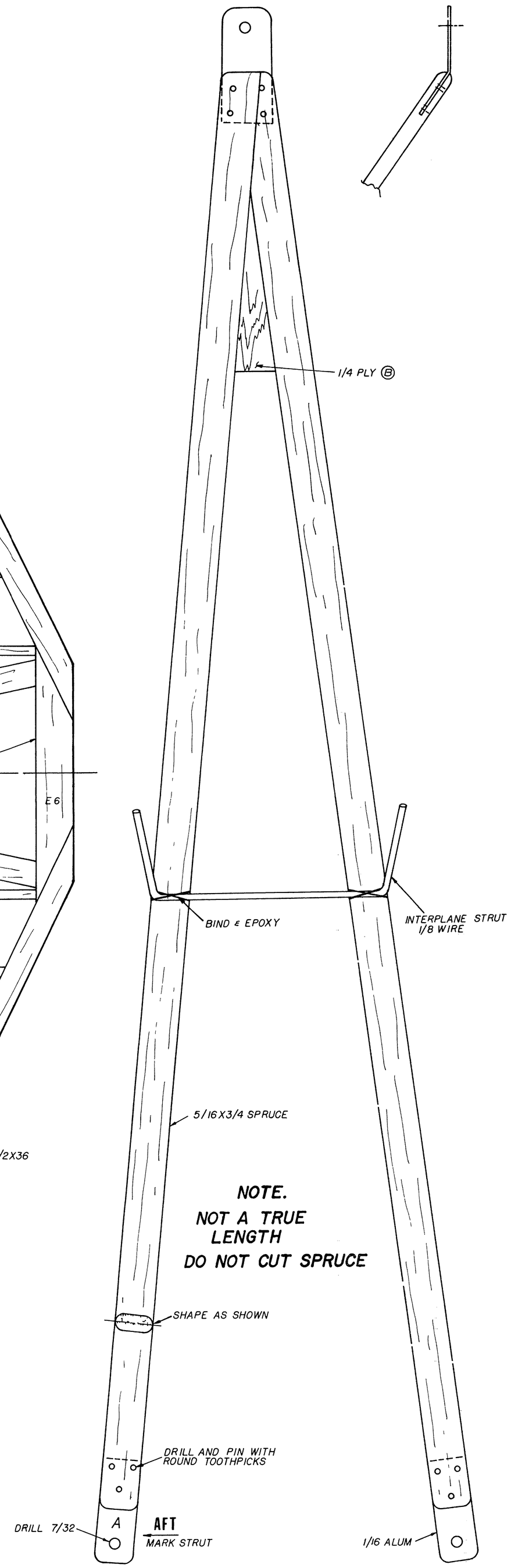

WING STRUT

0 1 2 3 4 5 6 7 8 9 10

"MISTER" MULLIGAN
plate 2 of 2