HORIZONTAL STABILIZER

(TOP VIEW)

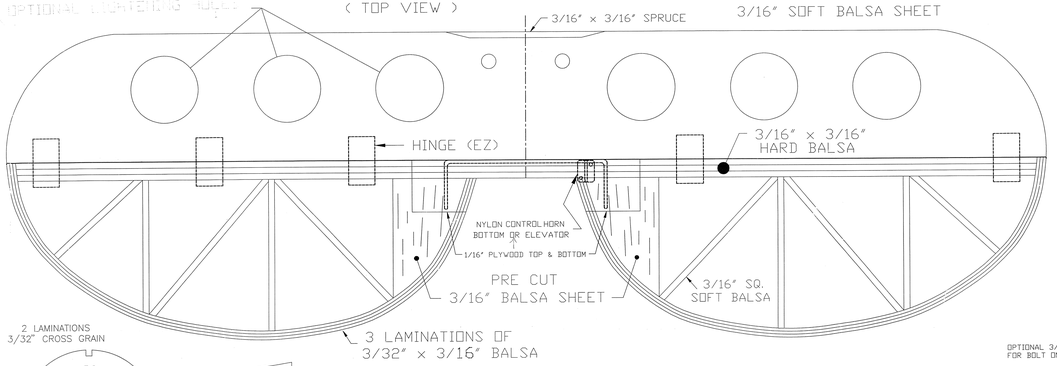

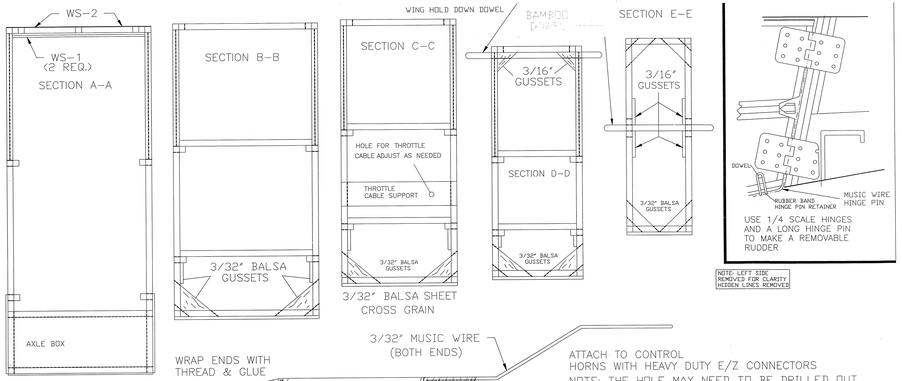

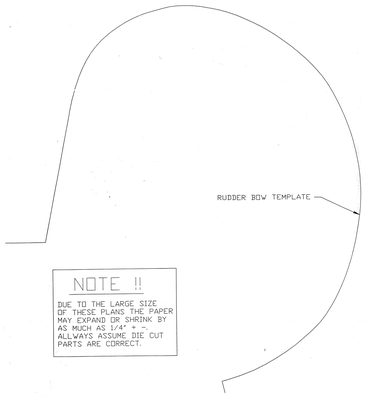

NOTE !!

DUE TO THE LARGE SIZE OF THESE PLANS THE PAPER MAY EXPAND OR SHRINK BY AS MUCH AS 1/4" + - ALWAYS ASSUME DIE CUT PARTS ARE CORRECT.

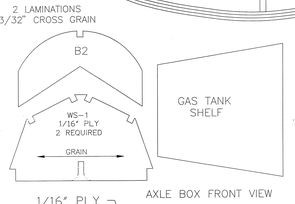

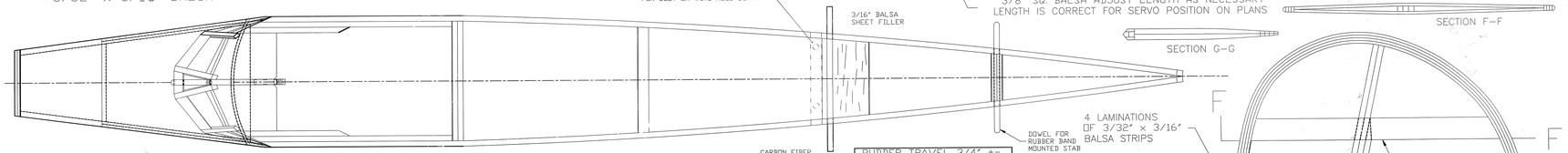

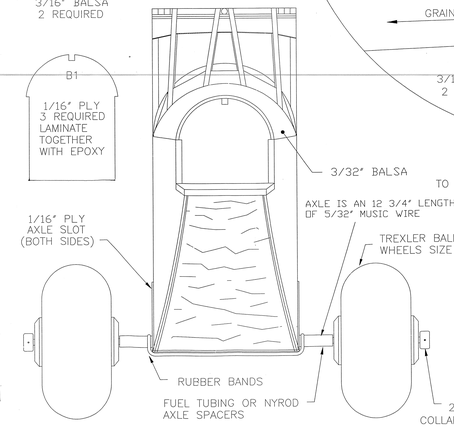

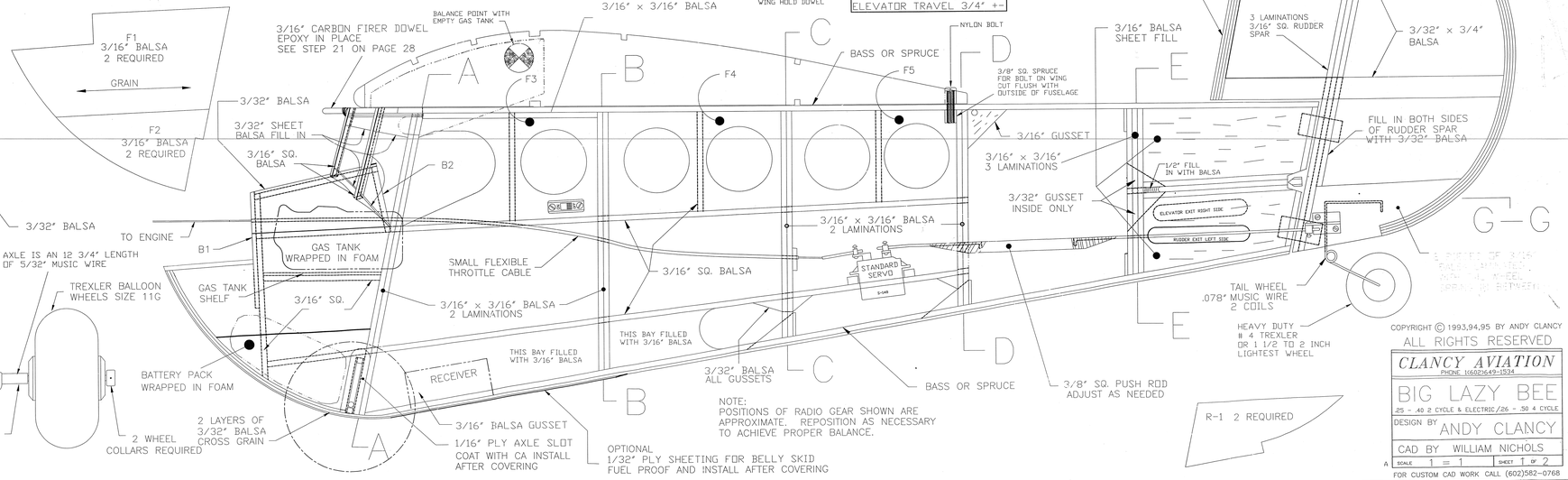

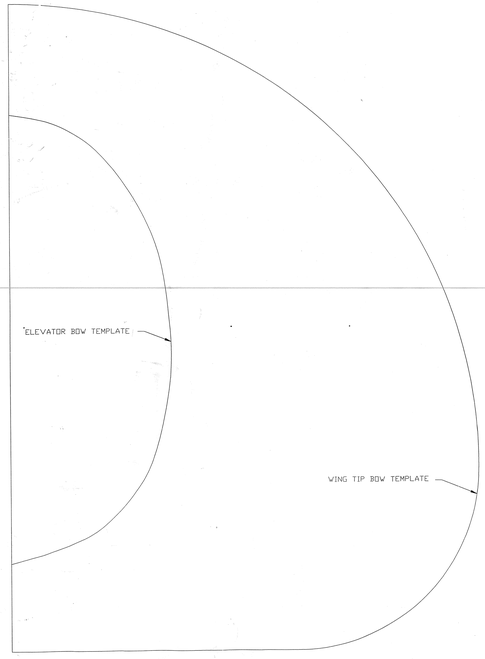

COPYRIGHT © 1993,94,95 BY ANDY CLANCY
ALL RIGHTS RESERVED

CLANCY AVIATION
PHONE (602)649-1534

BIG LAZY BEE

.25 - .40 2 CYCLE & ELECTRIC/.26 - .50 4 CYCLE

DESIGN BY ANDY CLANCY

CAD BY WILLIAM NICHOLS

A SCALE 1 = 1 SHEET 1 OF 2

FOR CUSTOM CAD WORK CALL (602)582-0768

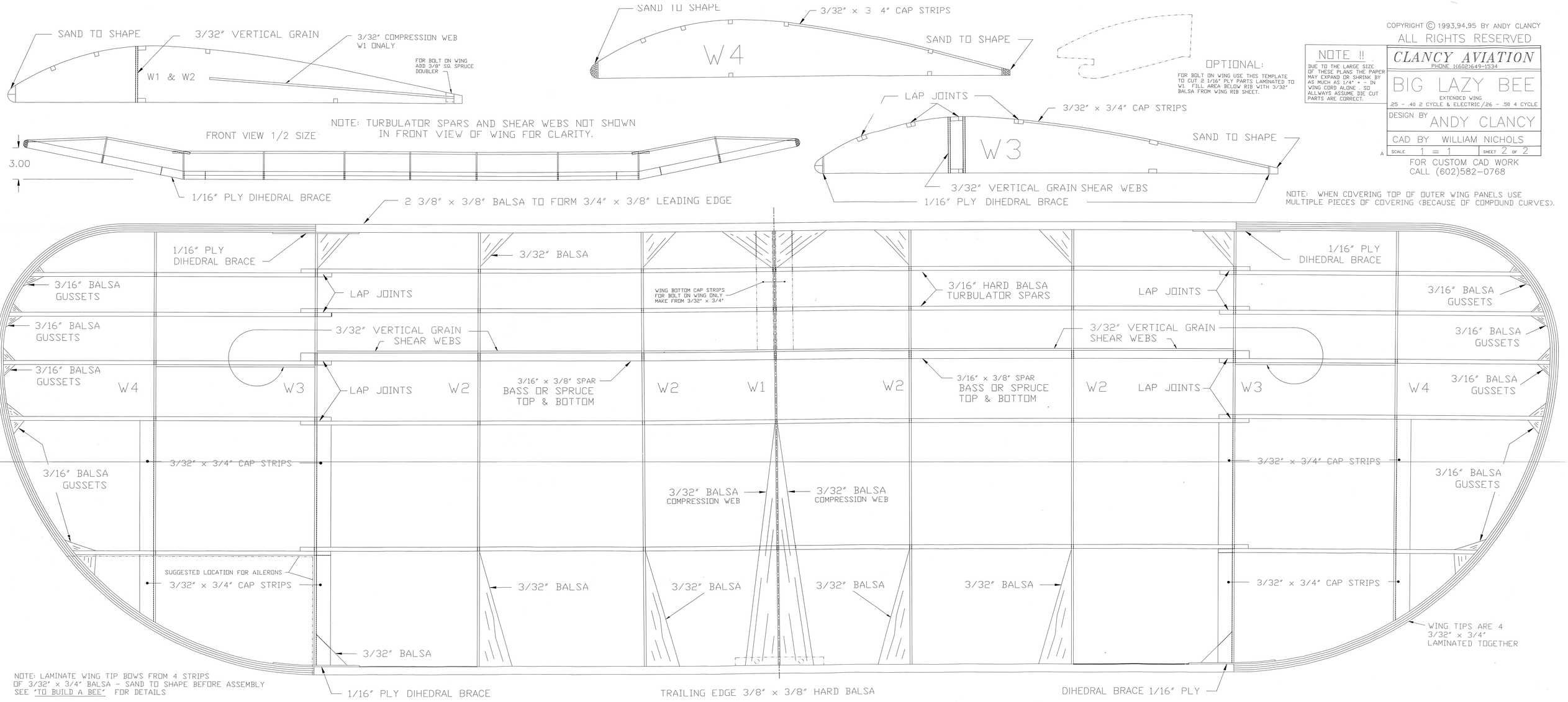
SAND TO SHAPE
3/32" VERTICAL GRAIN
3/32" COMPRESSION WEB W1 ONALY
FOR BOLT ON WING ADD 3/8" SQ. SPRUCE DOUBLER
W1 & W2
SAND TO SHAPE
3/32" x 3 4" CAP STRIPS
W4
SAND TO SHAPE
OPTIONAL:
FOR BOLT ON WING USE THIS TEMPLATE TO CUT 2 1/16" PLY PARTS LAMINATED TO W1. FILL AREA BELOW RIB WITH 3/32" BALSA FROM WING RIB SHEET.
NOTE !!
DUE TO THE LARGE SIZE OF THESE PLANS THE PAPER MAY EXPAND OR SHRINK BY AS MUCH AS 1/4" + - IN WING CORD ALONE . SO ALLWAYS ASSUME DIE CUT PARTS ARE CORRECT.
COPYRIGHT © 1993,94,95 BY ANDY CLANCY
ALL RIGHTS RESERVED
CLANCY AVIATION
PHONE (602)649-1534
BIG LAZY BEE
EXTENDED WING
.25 - .40 2 CYCLE & ELECTRIC/.26 - .50 4 CYCLE
DESIGN BY ANDY CLANCY
CAD BY WILLIAM NICHOLS
SCALE 1 = 1
SHEET 2 OF 2
FOR CUSTOM CAD WORK
CALL (602)582-0768
NOTE: TURBULATOR SPARS AND SHEAR WEBS NOT SHOWN IN FRONT VIEW OF WING FOR CLARITY.
FRONT VIEW 1/2 SIZE
3.00
1/16" PLY DIHEDRAL BRACE
LAP JOINTS
3/32" x 3/4" CAP STRIPS
W3
SAND TO SHAPE
3/32" VERTICAL GRAIN SHEAR WEBS
1/16" PLY DIHEDRAL BRACE
NOTE: WHEN COVERING TOP OF OUTER WING PANELS USE MULTIPLE PIECES OF COVERING (BECAUSE OF COMPOUND CURVES).
2 3/8" x 3/8" BALSA TO FORM 3/4" x 3/8" LEADING EDGE
1/16" PLY DIHEDRAL BRACE
3/32" BALSA
1/16" PLY DIHEDRAL BRACE
3/16" BALSA GUSSETS
LAP JOINTS
WING BOTTOM CAP STRIPS FOR BOLT ON WING ONLY MAKE FROM 3/32" x 3/4"
3/16" HARD BALSA TURBULATOR SPARS
LAP JOINTS
3/16" BALSA GUSSETS
3/16" BALSA GUSSETS
3/32" VERTICAL GRAIN SHEAR WEBS
3/32" VERTICAL GRAIN SHEAR WEBS
3/16" BALSA GUSSETS
3/16" BALSA GUSSETS
W4
W3
LAP JOINTS
W2
3/16" x 3/8" SPAR BASS OR SPRUCE TOP & BOTTOM
W2
W1
W2
3/16" x 3/8" SPAR BASS OR SPRUCE TOP & BOTTOM
W2
LAP JOINTS
W3
W4
3/16" BALSA GUSSETS
3/32" x 3/4" CAP STRIPS
3/32" x 3/4" CAP STRIPS
3/16" BALSA GUSSETS
3/32" BALSA COMPRESSION WEB
3/32" BALSA COMPRESSION WEB
SUGGESTED LOCATION FOR AILERONS
3/32" x 3/4" CAP STRIPS
3/32" BALSA
3/32" BALSA
3/32" BALSA
3/32" BALSA
3/32" x 3/4" CAP STRIPS
WING TIPS ARE 4 3/32" x 3/4" LAMINATED TOGETHER
3/32" BALSA
NOTE: LAMINATE WING TIP BOWS FROM 4 STRIPS OF 3/32" x 3/4" BALSA - SAND TO SHAPE BEFORE ASSEMBLY SEE 'TO BUILD A BEE' FOR DETAILS
1/16" PLY DIHEDRAL BRACE
TRAILING EDGE 3/8" x 3/8" HARD BALSA
DIHEDRAL BRACE 1/16" PLY

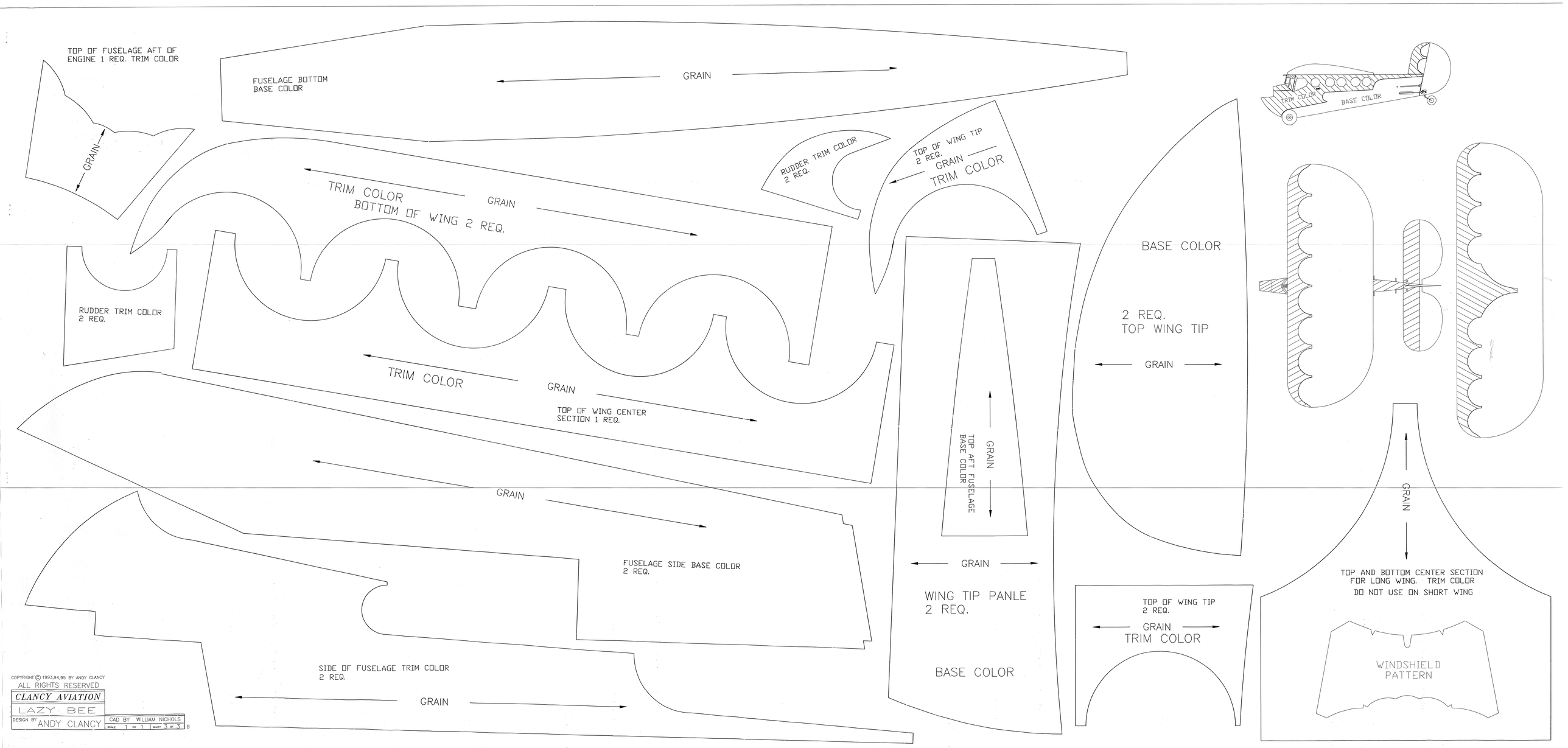
TOP OF FUSELAGE AFT OF ENGINE 1 REQ. TRIM COLOR
GRAIN
FUSELAGE BOTTOM BASE COLOR
GRAIN
TRIM COLOR
BASE COLOR
RUDDER TRIM COLOR 2 REQ.
TOP OF WING TIP 2 REQ.
GRAIN
TRIM COLOR
TRIM COLOR BOTTOM OF WING 2 REQ.
GRAIN
RUDDER TRIM COLOR 2 REQ.
BASE COLOR
2 REQ. TOP WING TIP
GRAIN
TRIM COLOR
GRAIN
TOP OF WING CENTER SECTION 1 REQ.
GRAIN
TOP AFT FUSELAGE BASE COLOR
GRAIN
GRAIN
FUSELAGE SIDE BASE COLOR 2 REQ.
GRAIN
WING TIP PANLE 2 REQ.
BASE COLOR
TOP OF WING TIP 2 REQ.
GRAIN
TRIM COLOR
GRAIN
TOP AND BOTTOM CENTER SECTION FOR LONG WING. TRIM COLOR
DO NOT USE ON SHORT WING
SIDE OF FUSELAGE TRIM COLOR 2 REQ.
GRAIN
WINDSHIELD PATTERN
COPYRIGHT © 1993,94,95 BY ANDY CLANCY
ALL RIGHTS RESERVED
CLANCY AVIATION
LAZY BEE
DESIGN BY ANDY CLANCY
CAD BY WILLIAM NICHOLS
SCALE 1 = 1
SHEET 3 OF 3
B