WING PLAN TOP VIEW

WING TIPS ARE TWO LAMINATIONS OF 3/32" BALSA SHEET

ALL WING RIBS ARE 1/16" BALSA SHEET "C" GRAIN

1/32" I.D. ALUM. TUBE L.G. PLUG-INS

1/16" x 1/8" HD. BALSA OR BASSWOOD SPARS

1/16" HARD BALSA DIHEDRAL BRACE

DIHEDRAL IS 2-1/4" AT EACH WING TIP

1/32" PLY ON BOT.

WING CENTER SECTION IS FLAT

1/8" WASHOUT HERE, BOTH WING TIPS

1/16" HD. BALSA BRACE

3/32" x 3/16" BALSA T.E.

SCRAP BALSA GUSSETS (TYP.)

3/32" SHEET

1/32" PLY DOUBLER

NOTES

WET FORM PROP BLADES ON 4" DIA. FORM, 15° LEFT. USE MED. HD. BALSA FOR FUSE. BOX & SPARS - ALL OTHER CONST. IS 6-8 LB. CONTEST STOCK. COCKPIT FLOOR IS CARD STOCK (F-H). NOTCH SIDE STRINGERS INTO CROSS PIECES AT FUSE. REAR FOR STRENGTH. MAKE RIB TEMPLATES ON LONG RIB, ROTATE ON L.E. FOR REMAINING RIBS. GLUE COVERED WING TO FUSE. BEFORE ADDING TWO 3/32" STRINGERS FROM E TO H ON BOTTOM. CROSSES ON WING HAD NARROW WHITE OUTLINE ON THE TOP OF WING - BROAD WHITE ON BOTTOM - SEE FUSE. SIDE FOR UNDER WING CROSS.

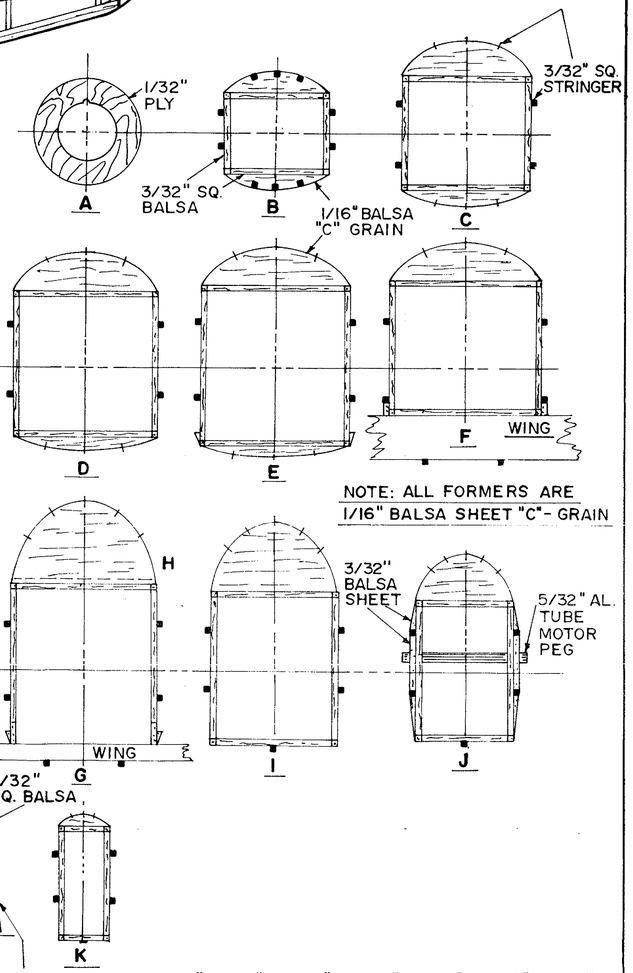

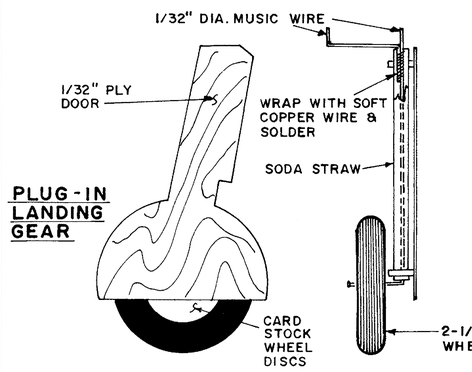

WING RIB PATTERNS

STABILIZER

3/32" BALSA SHEET

1/16" x 1/4" BALSA (TYP.)

ELEVATOR

SCRAP GUSSETS

SCALE OUTLINE

WING FILLETS

CARD STOCK

FRAMING ON CANOPY IS ELECTRICAL TAPE STRIPS

FUSELAGE TOP VIEW

BALSA SPINNER

1/32" PLY

1/8" DIA. AL. TUBE "KEY"

1/16" M.W. SHAFT

1/16" I.D. BRASS TUBE

THRUST BEARING

1/32" PROP BLADES

3/16" DOWEL SLOT

1/16" STYRENE MAST

SAND RUDDER TO SYMMETRICAL AIRFOIL

3/32" SHEET

3/32" SQ.

SOFT WIRE

5/32" AL. TUBE MOTOR PEG

1/16" x 1/4" BALSA (TYP.)

3/32" SOFT FILL

3/32" SQ. BALSA

3/16" BRASS TUBE CLUTCH

3/16" BALSA SHEET

3/32" SOFT BALSA FILL

1/4" BALSA SHEET EXHAUST STACKS

3/32" BALSA SHEET

3/32" SQ BALSA

3/32" SHEET, SEE "J"

3/16" x 1/4" BALSA

CARD STOCK

5/32" AL. TUBE

BALSA FORK

1/4" BALSA WHEEL 3/4" DIA.

FUSELAGE SIDE VIEW

0" 1" 2" 3" 4" 5" 6"

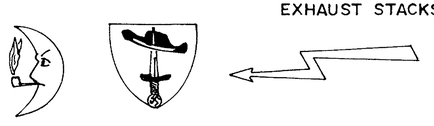

SQUADRON EMBLEMS

LIGHTENING STREAK WAS YELLOW ON DARK GREEN AIRCRAFT WITH LIGHT GRAY UNDERSIDE.

CHURCHILL'S HAT WAS BLACK, SILVER BLADE WITH GOLD HANDLE ON WHITE SHIELD - AIRCRAFT WAS DARK GREEN SPOTTED W/ BROWN, LT. GRAY UNDERSIDE.

MOON & PIPE WERE WHITE W/ YELLOW & ORANGE FLAMES — NIGHT FIGHTER WAS BLACK WITH LT. GRAY UNDERSIDE.

NUMBERING WAS WHITE ON ALL AIRCRAFT.

SPECIFICATIONS

WING SPAN	29-3/4"
LENGTH	26-1/4"
WEIGHT	76 GRAMS
POWER	4 LOOPS 1/8" FAI TAN II

FLYING MODELS		
HEINKEL HE-100 D		
DESIGNED BY BOB ISAACKS		
DRAWN BY BOB ISAACKS		
INKED PLAN BY JOE DEMARCO		
ALL RIGHTS RESERVED	SHEET 1 OF 1	CD-242