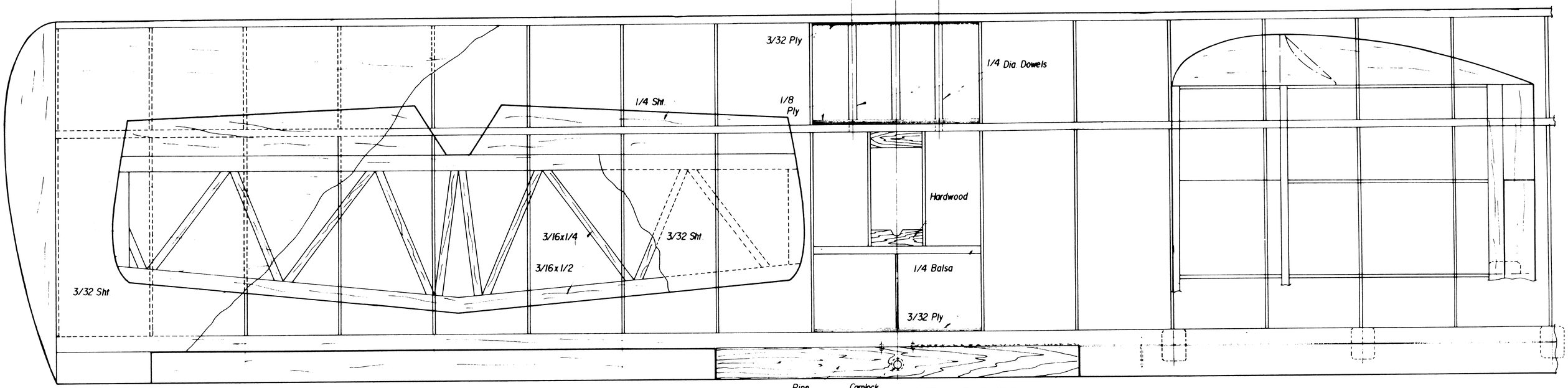

BOTTOM VIEW OF WING

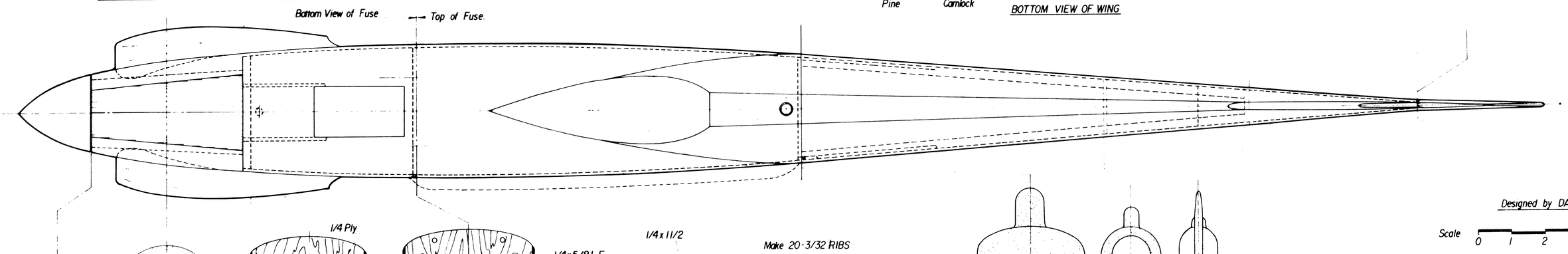

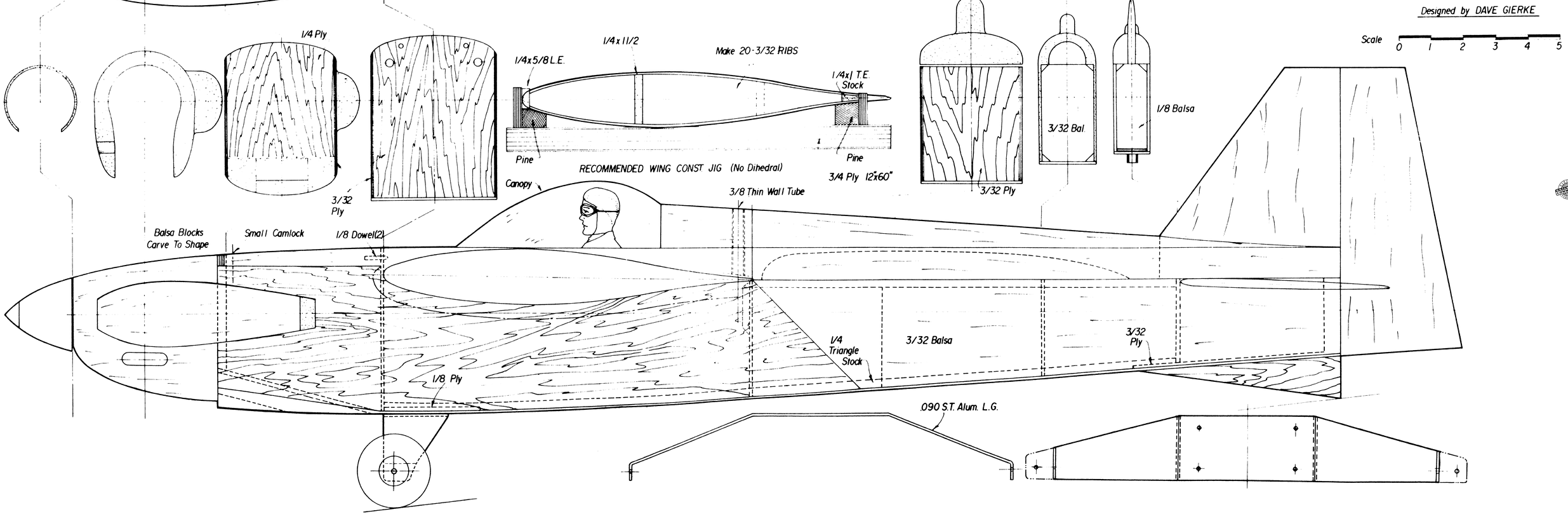

"Dee-Kay Special"

by Dave Gierke and Kent Landerfeld