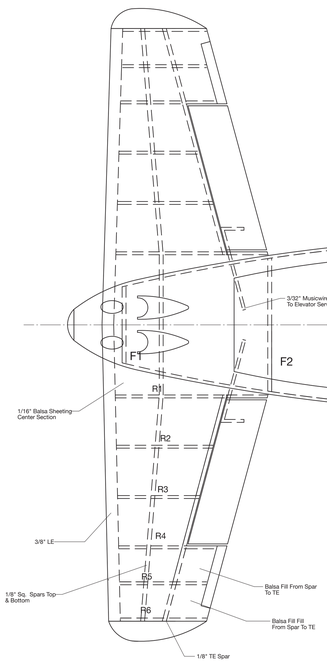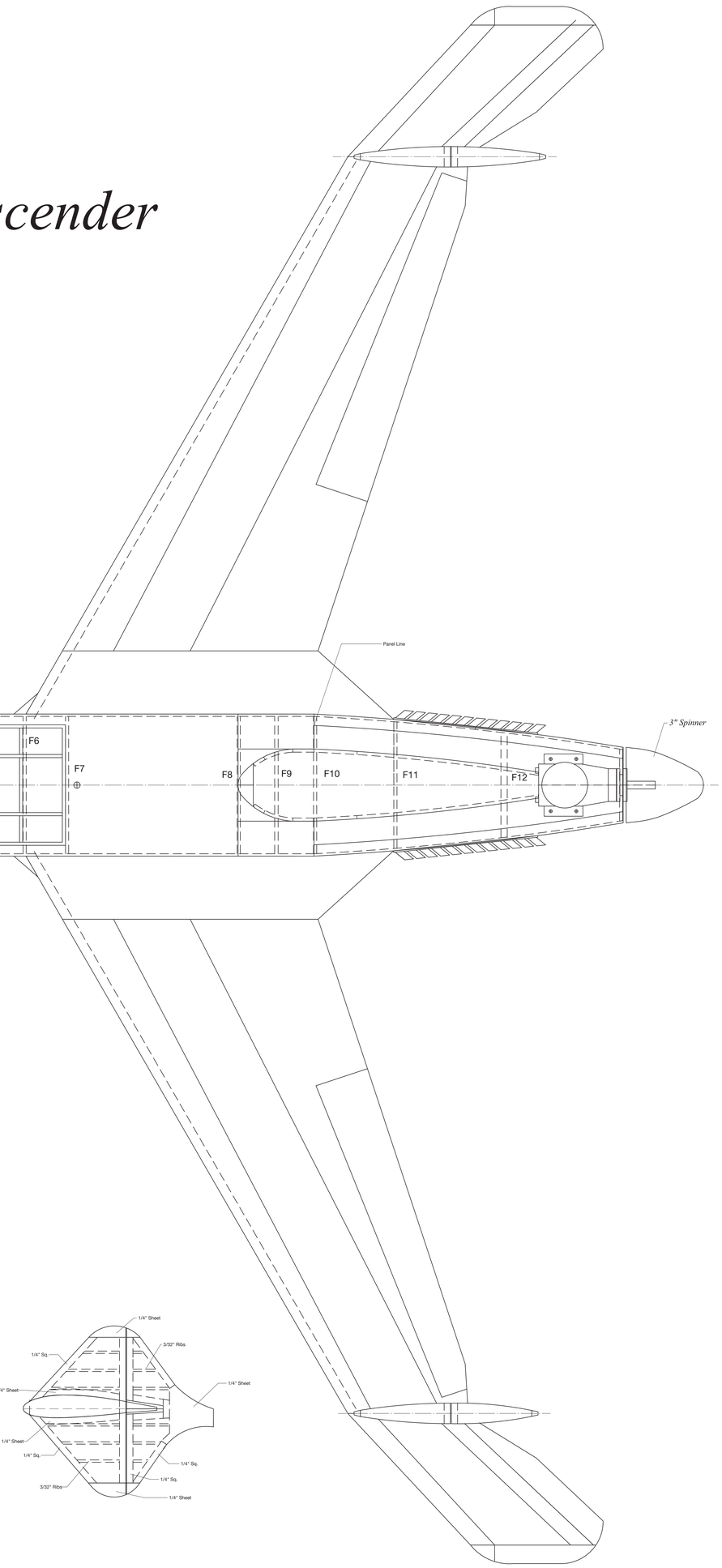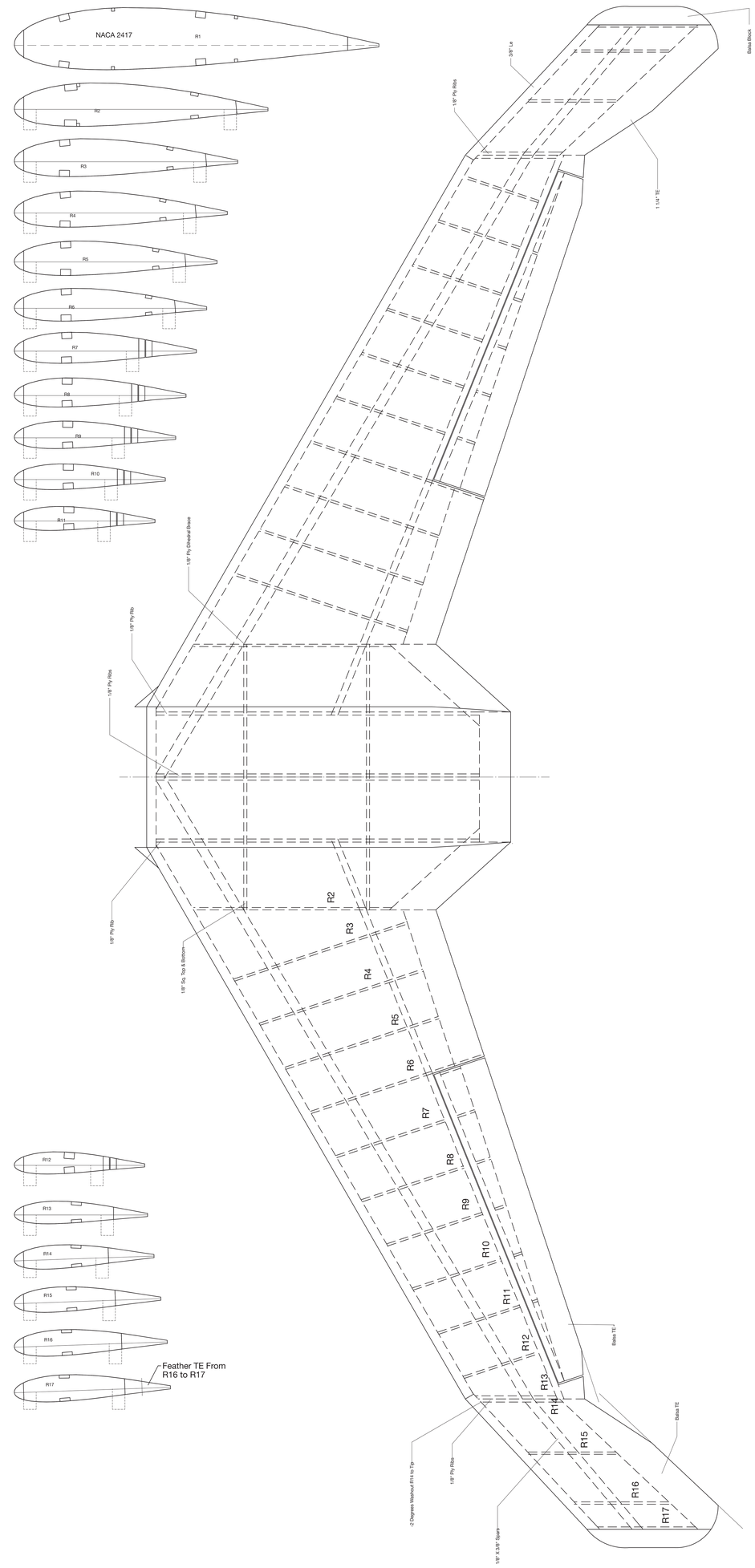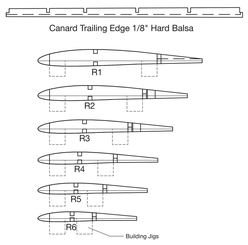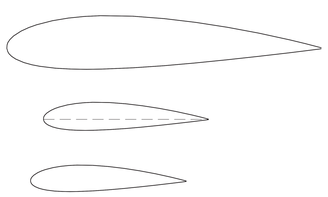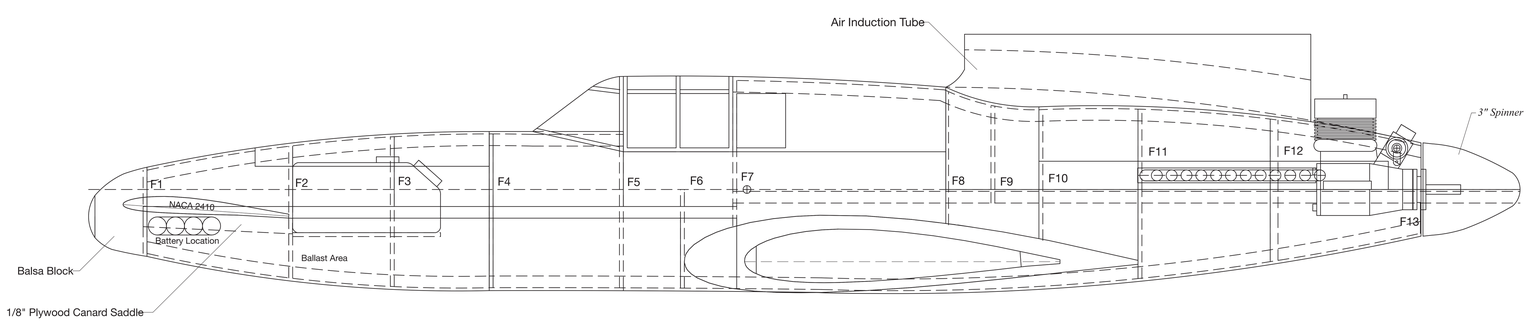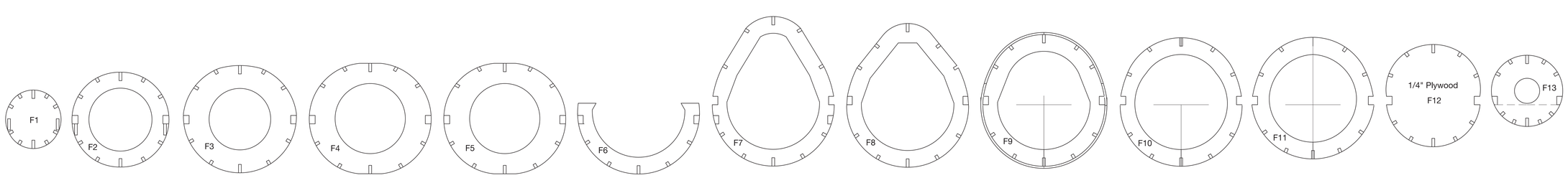Curtiss XP-55 Ascender
63" Wingspan
.61 engine