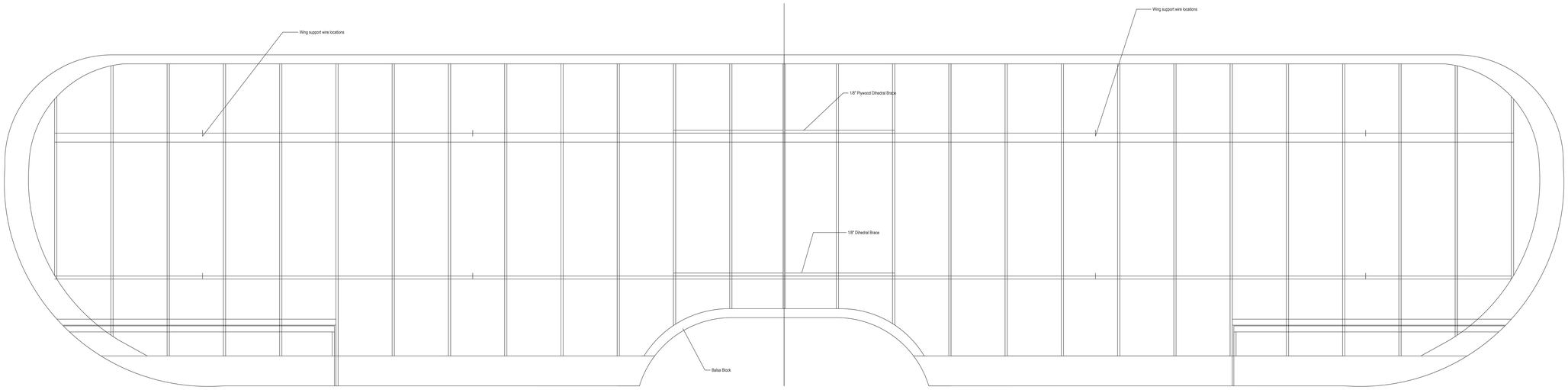

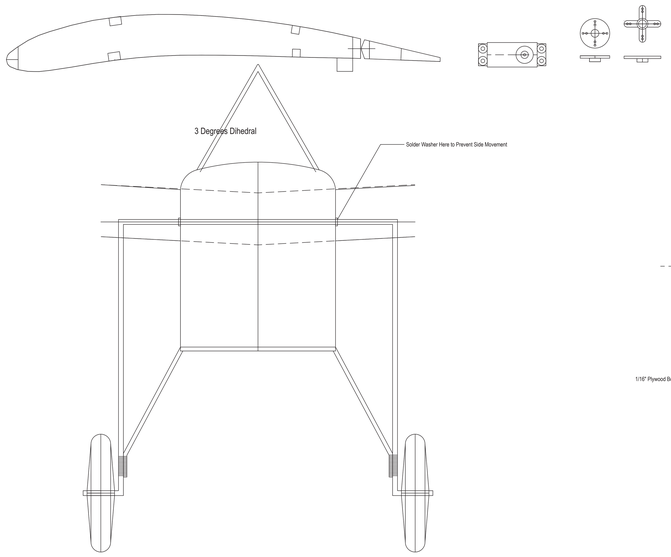

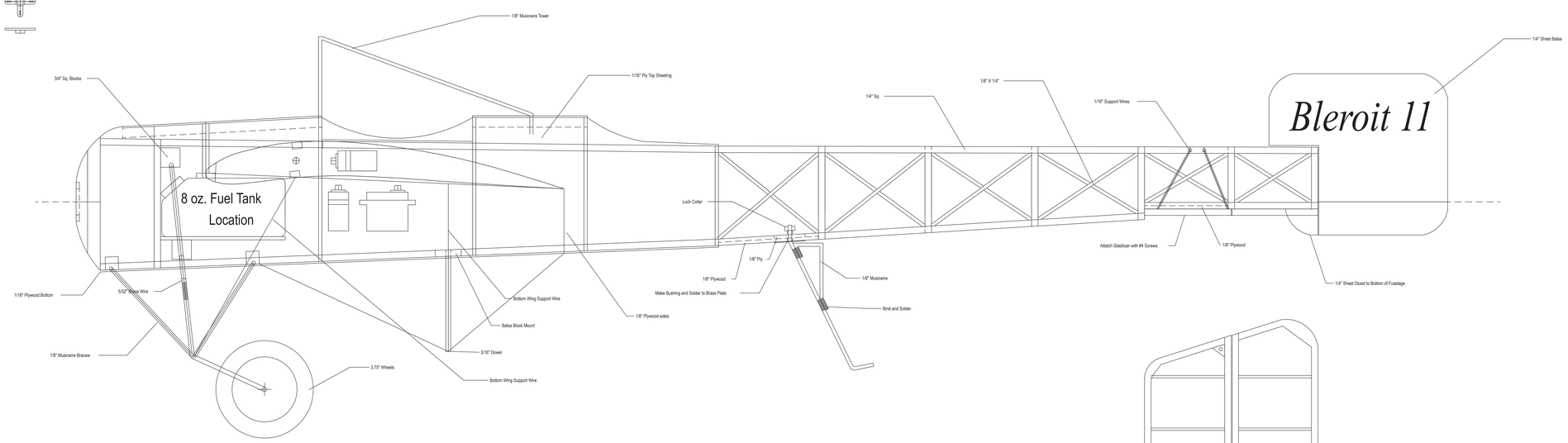

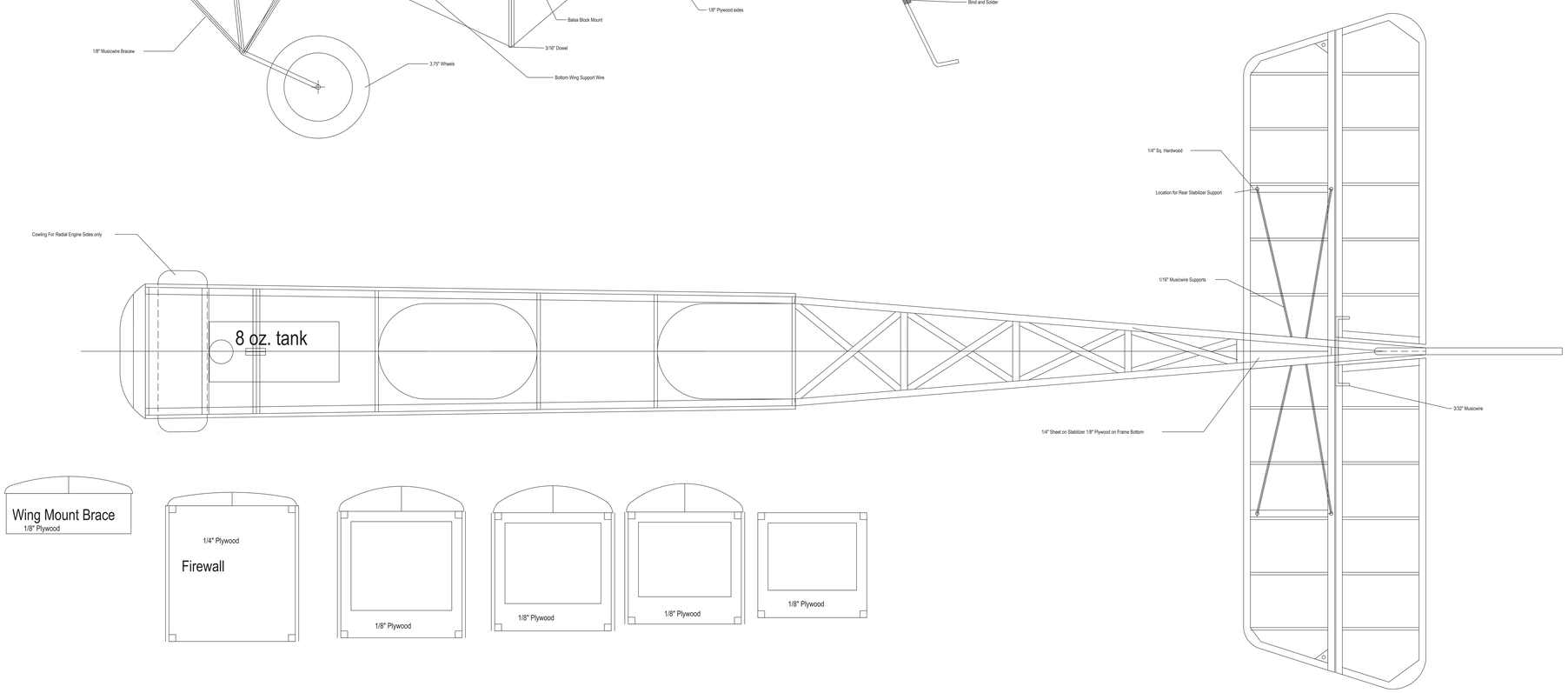

Bleroit 11 Monoplane

65" Wingspan