Albatross B.I
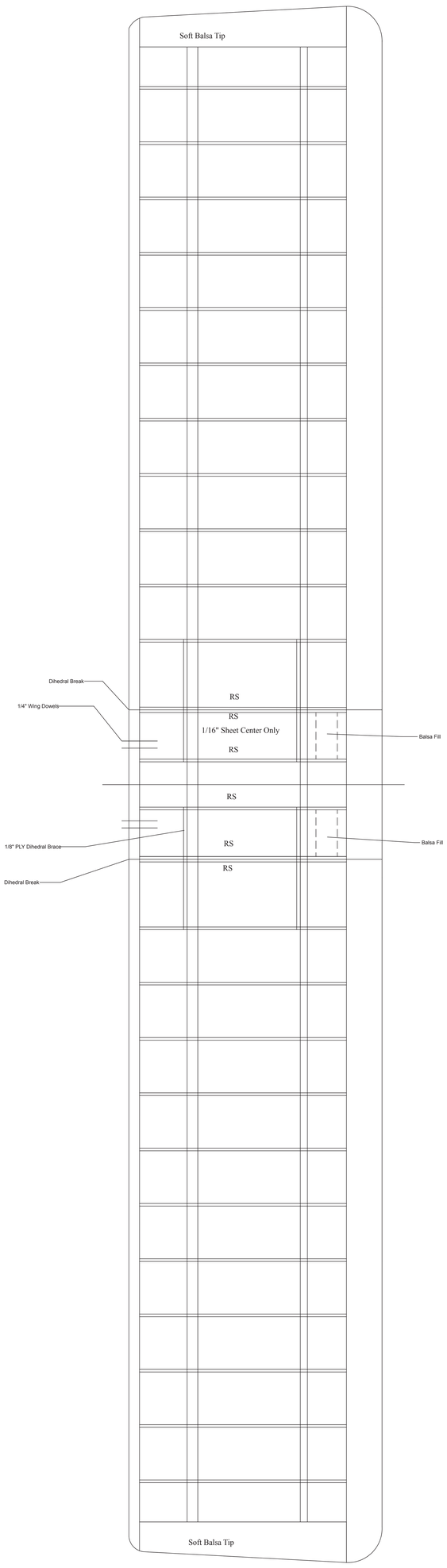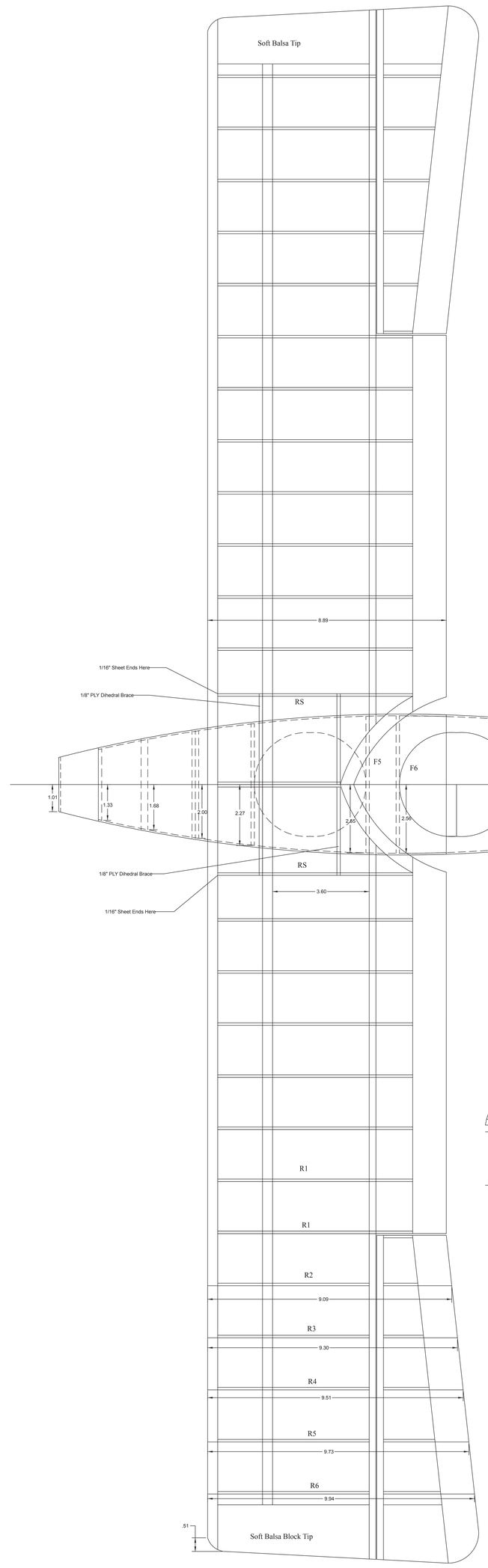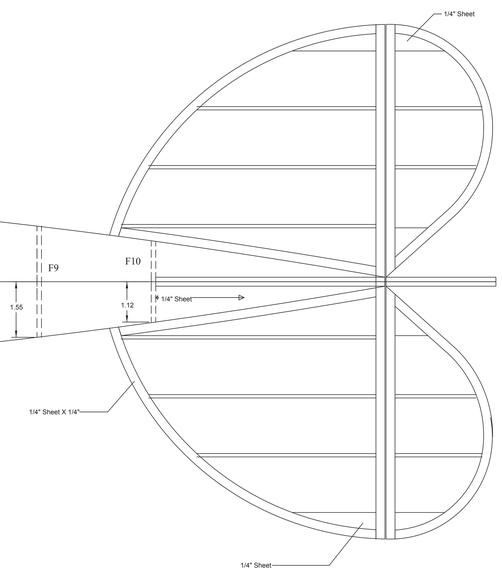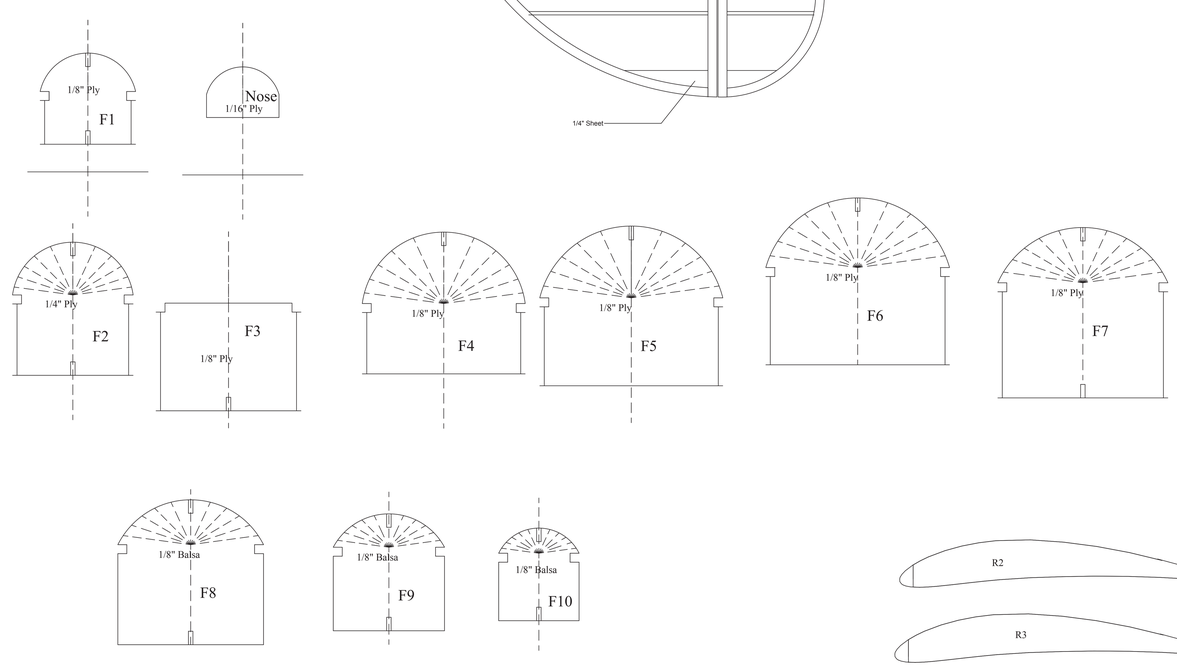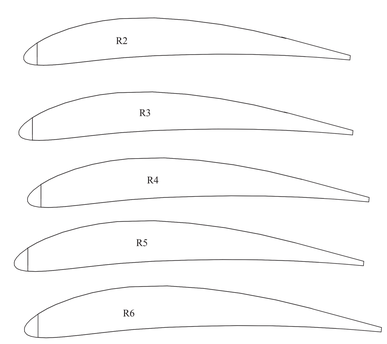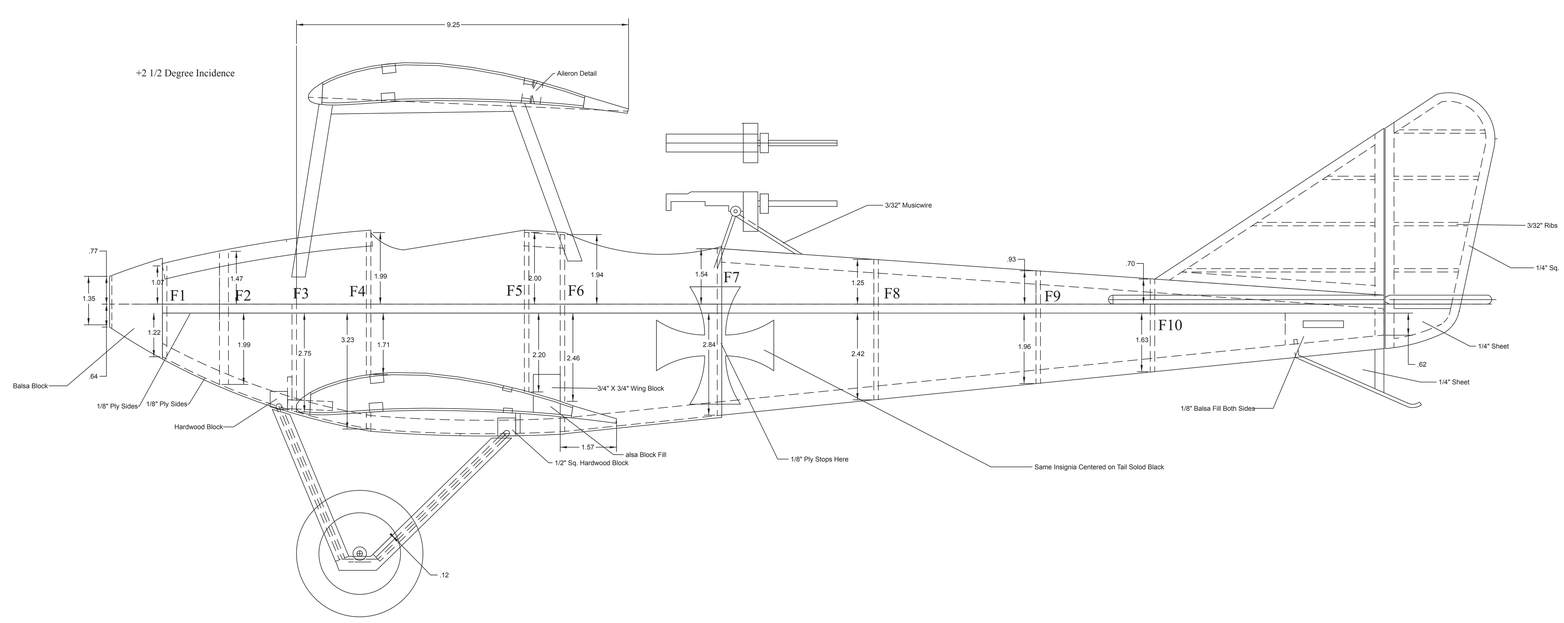
53” Wingspan