DE LUXE

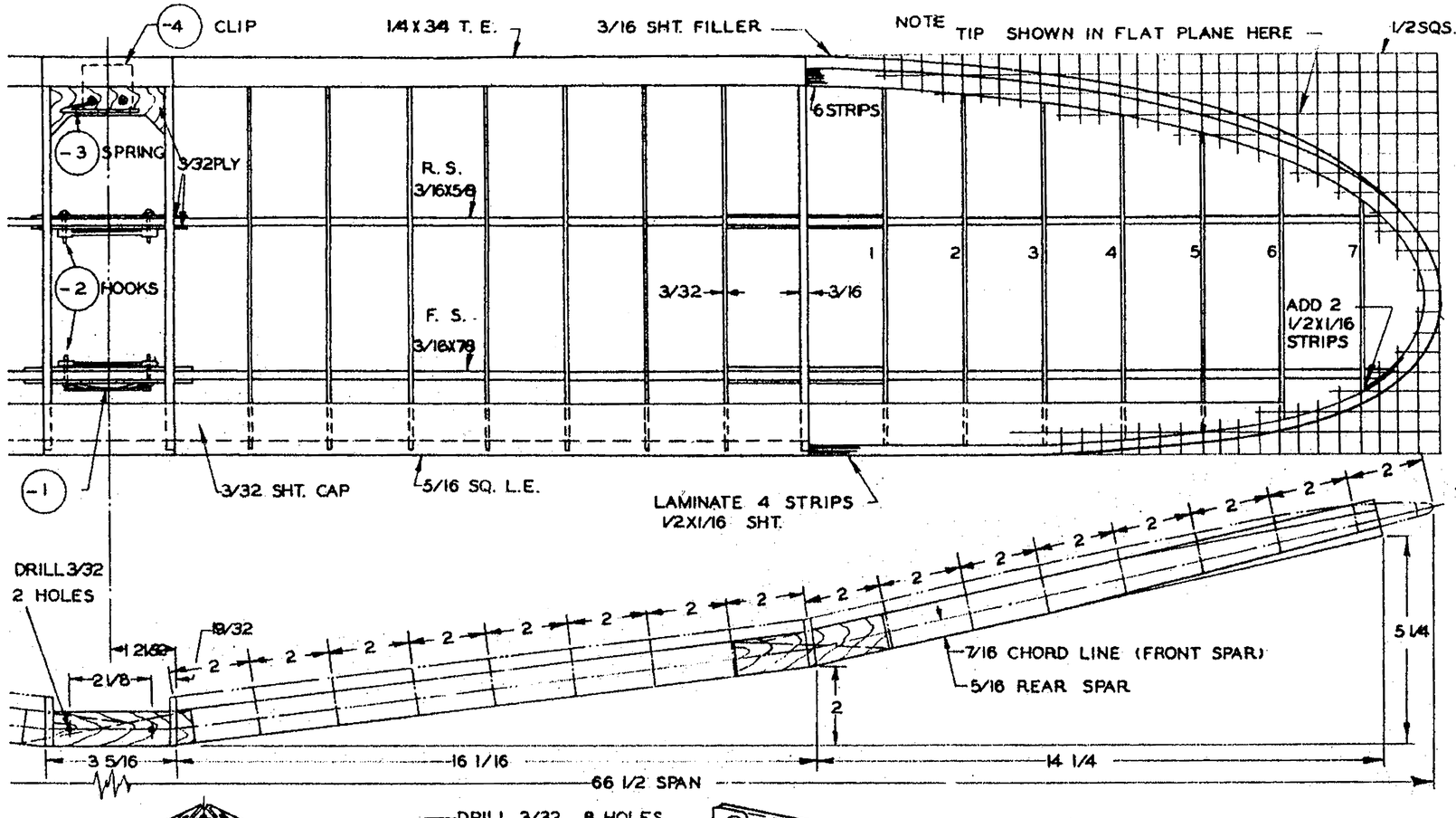

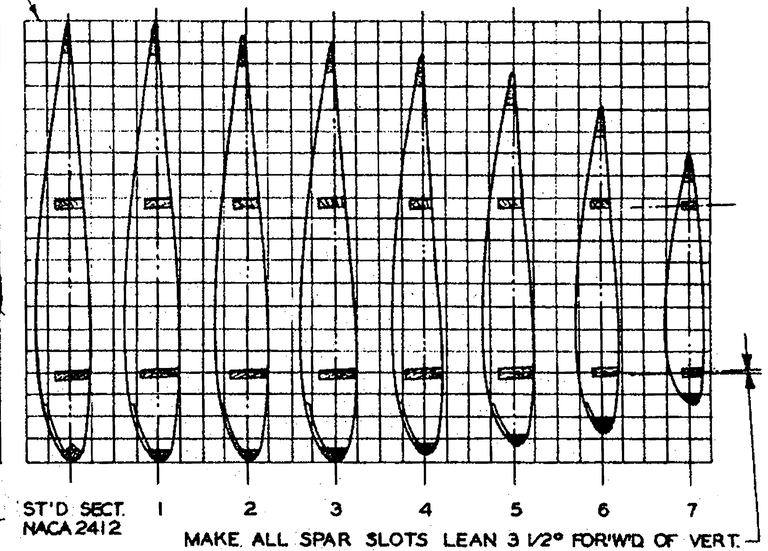

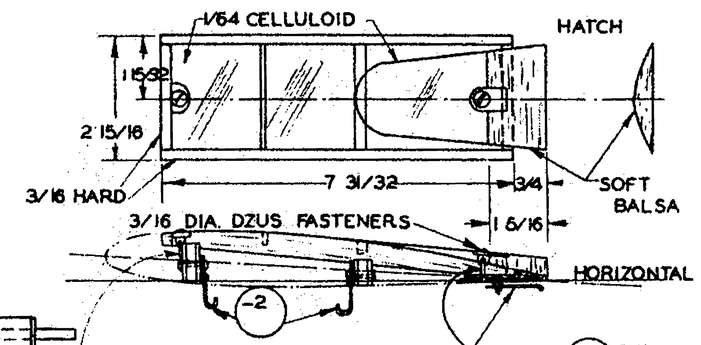

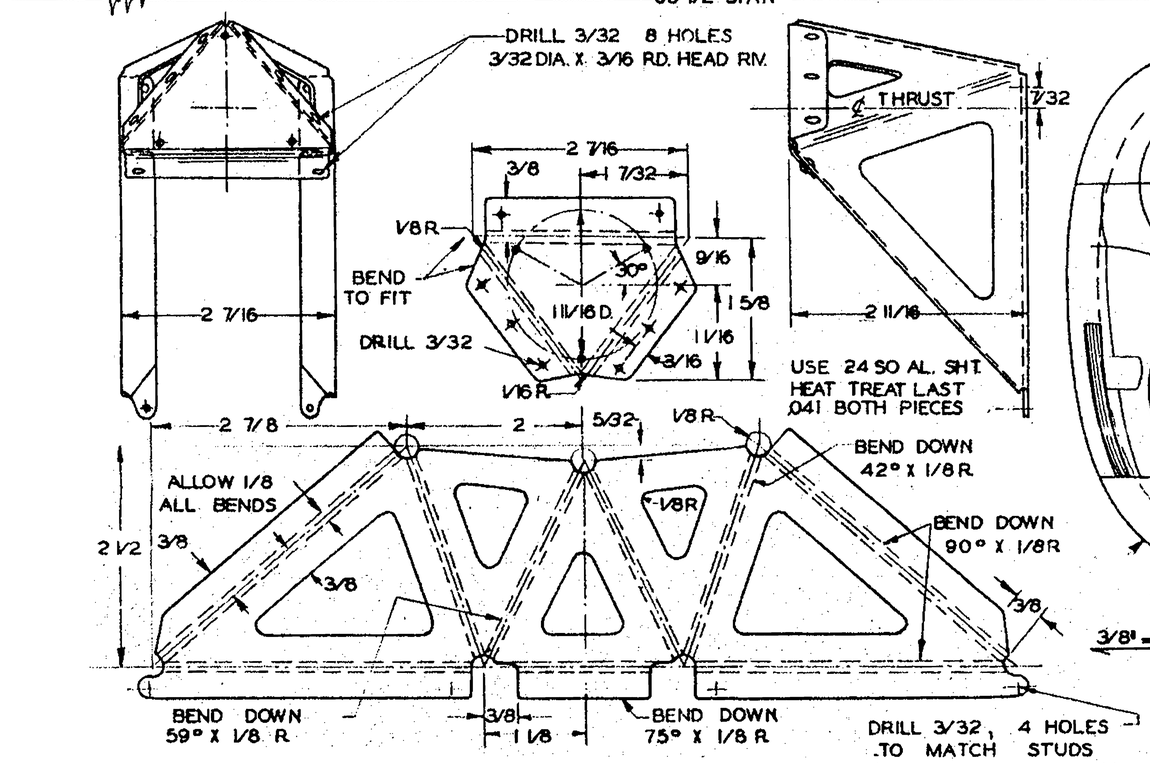

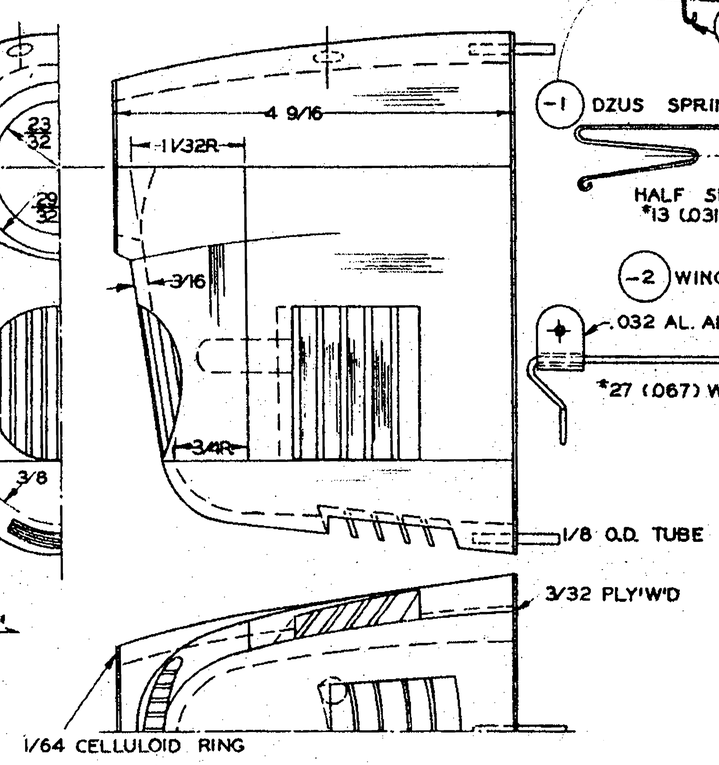

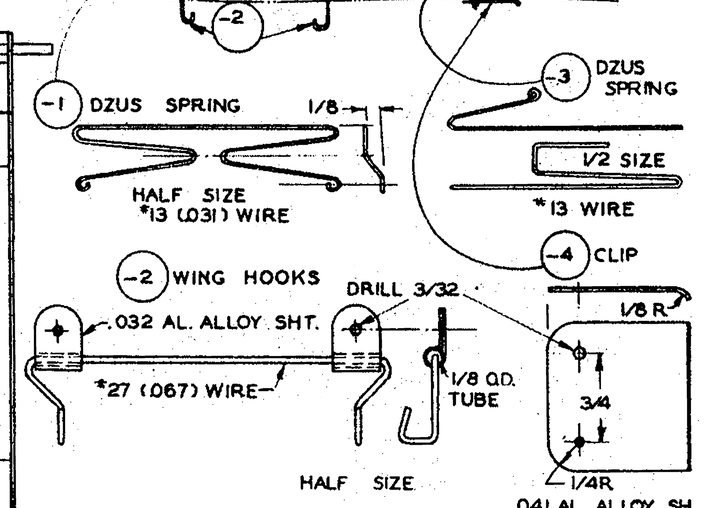

NOTE

ATTACH 1-2-3-4 WITH 2-56 SCREWS & 1/4" WASHERS

WING, MOTOR MOUNT & COWLING		
SCALE 3/16" = 1" & NOTED	'DELUXE'	5/2/45

DE LUXE

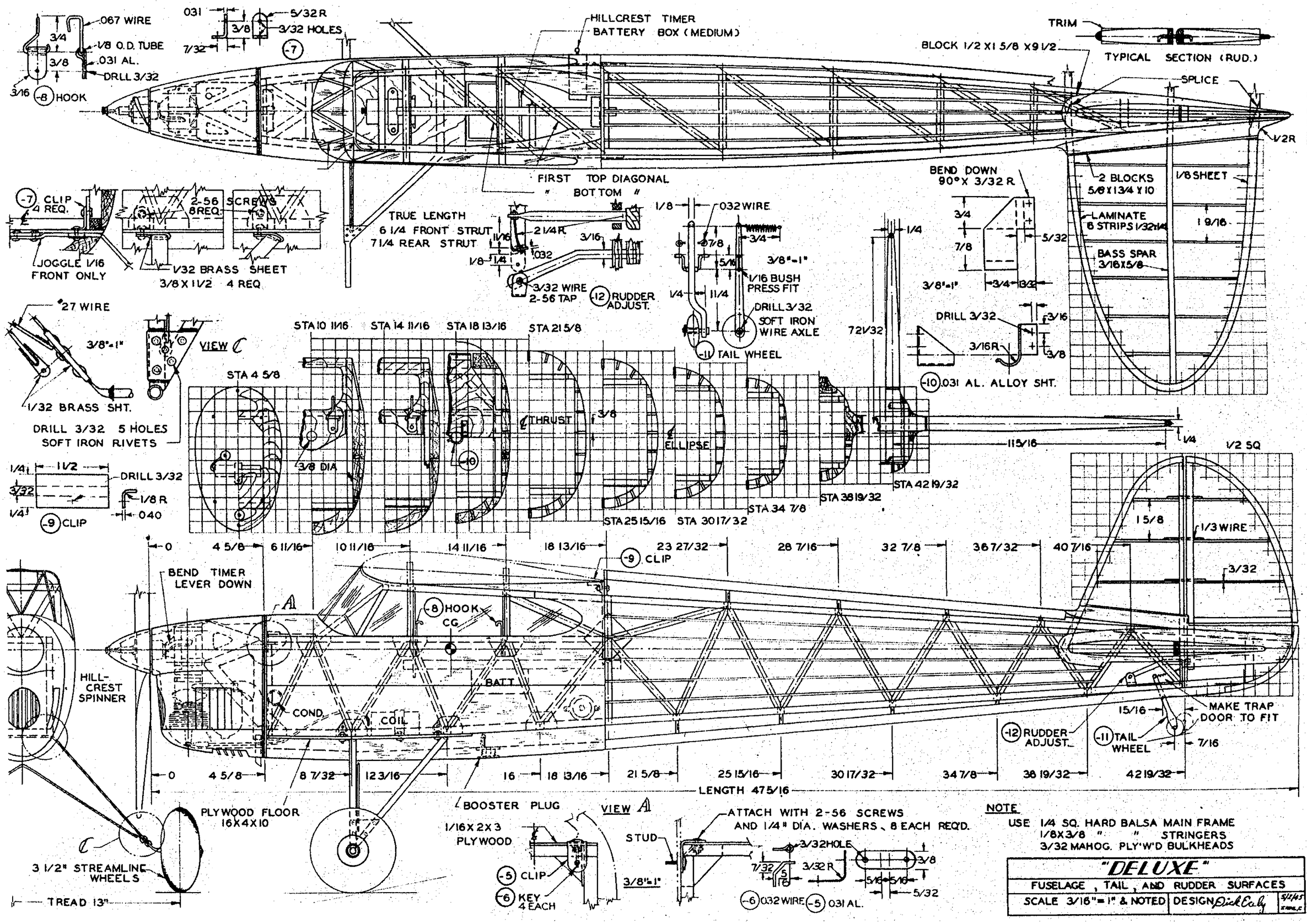

NOTE
USE 1/4 SQ. HARD BALSA MAIN FRAME
1/8 X 3/8 " " STRINGERS
3/32 MAHOG. PLY'W'D BULKHEADS

"DELUXE"		
FUSELAGE, TAIL, AND RUDDER SURFACES		
SCALE 3/16" = 1" & NOTED	DESIGN Dick Early	5/1/45