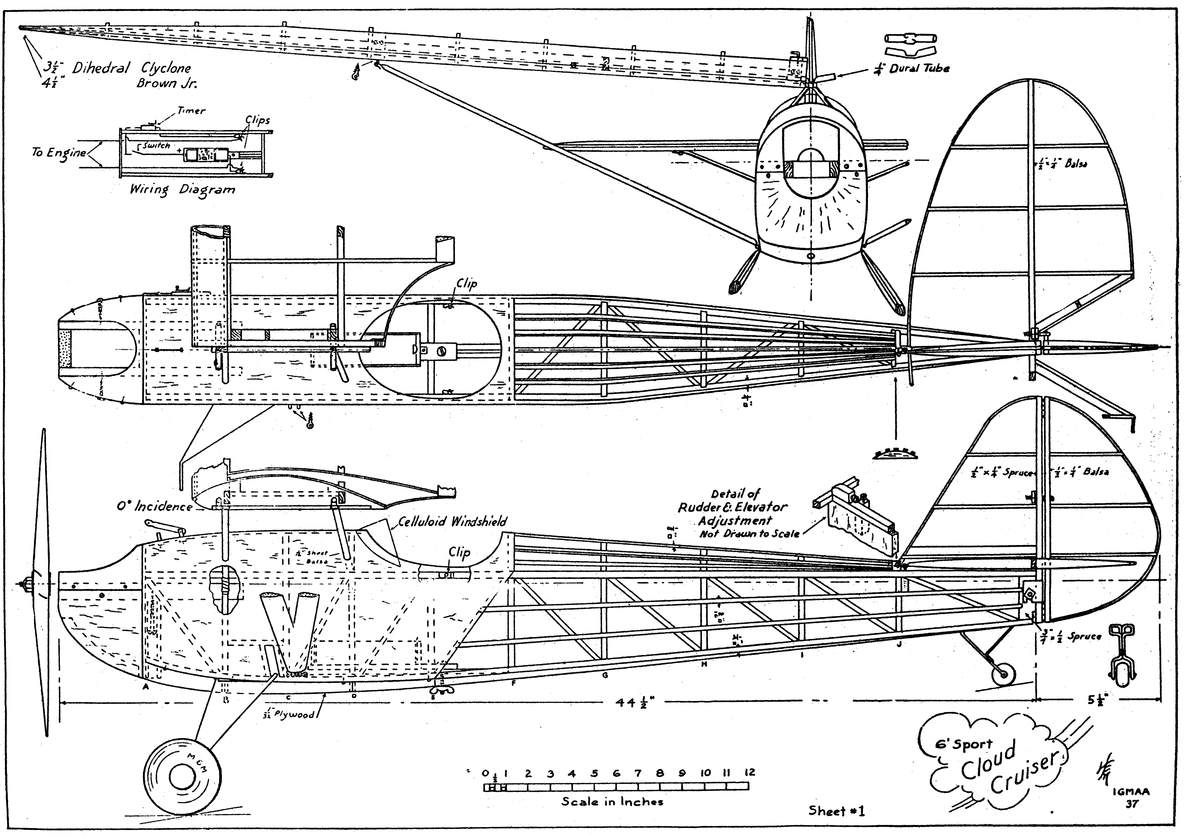
3½" Dihedral Clyclone
4½" Brown Jr.
Timer
Clips
To Engine
Switch
Wiring Diagram
¼" Dural Tube
Balsa
Clip
0° Incidence
Celluloid Windshield
Clip
Detail of Rudder & Elevator Adjustment Not Drawn to Scale
Spruce
Balsa
Spruce
Plywood
44½"
5½"
Scale in Inches
6' Sport Cloud Cruiser
IGMAA 37
Sheet #1

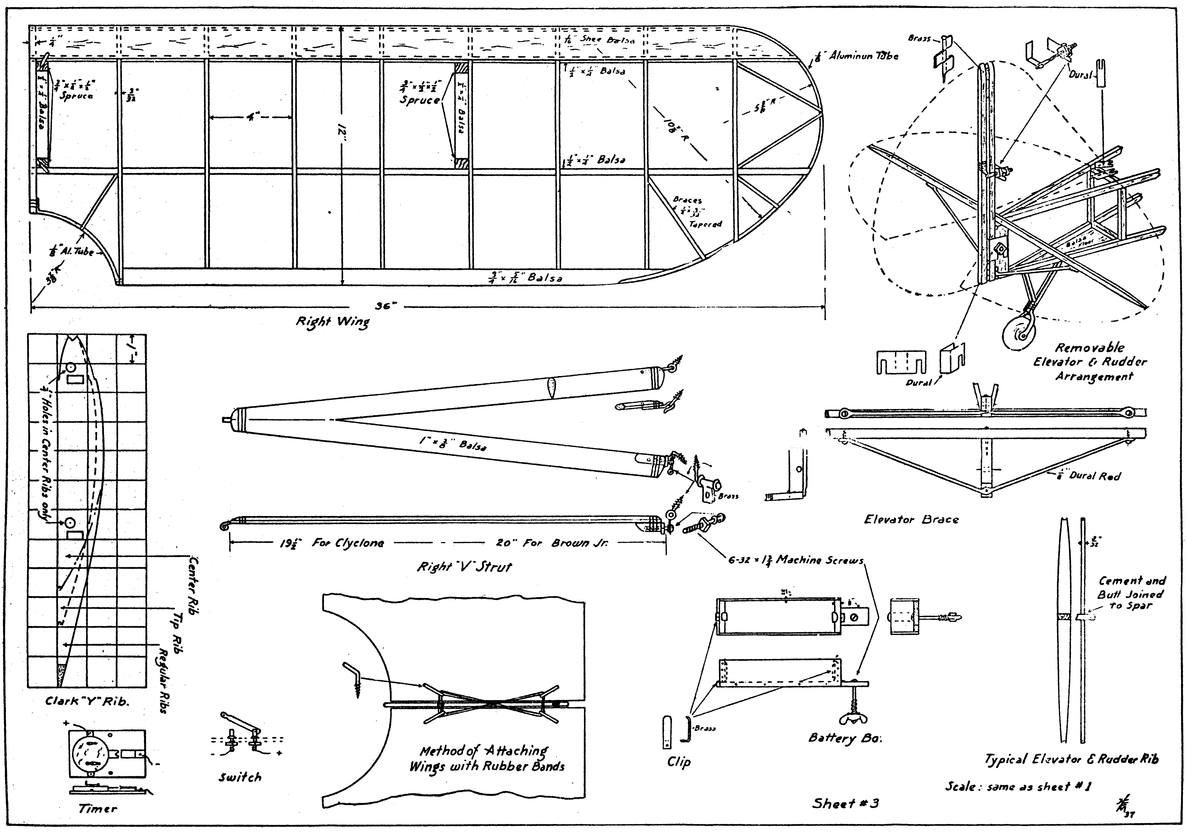
Shee Balsa
Aluminum Tube
Spruce
Balsa
Spruce
Balsa
Balsa
Braces Tapered
Al Tube
Balsa
36"
Right Wing
Brass
Dural
Removable Elevator & Rudder Arrangement
Dural
Balsa
Dural Rod
Elevator Brace
19½" For Clyclone
20" For Brown Jr.
Right "V" Strut
6-32 × 1¼ Machine Screws
Brass
Clark "Y" Rib.
Center Rib
Tip Rib
Regular Ribs
Timer
Switch
Method of Attaching Wings with Rubber Bands
Clip
Battery Box
Cement and Butt Joined to Spar
Typical Elevator & Rudder Rib
Scale: same as sheet #1
Sheet #3

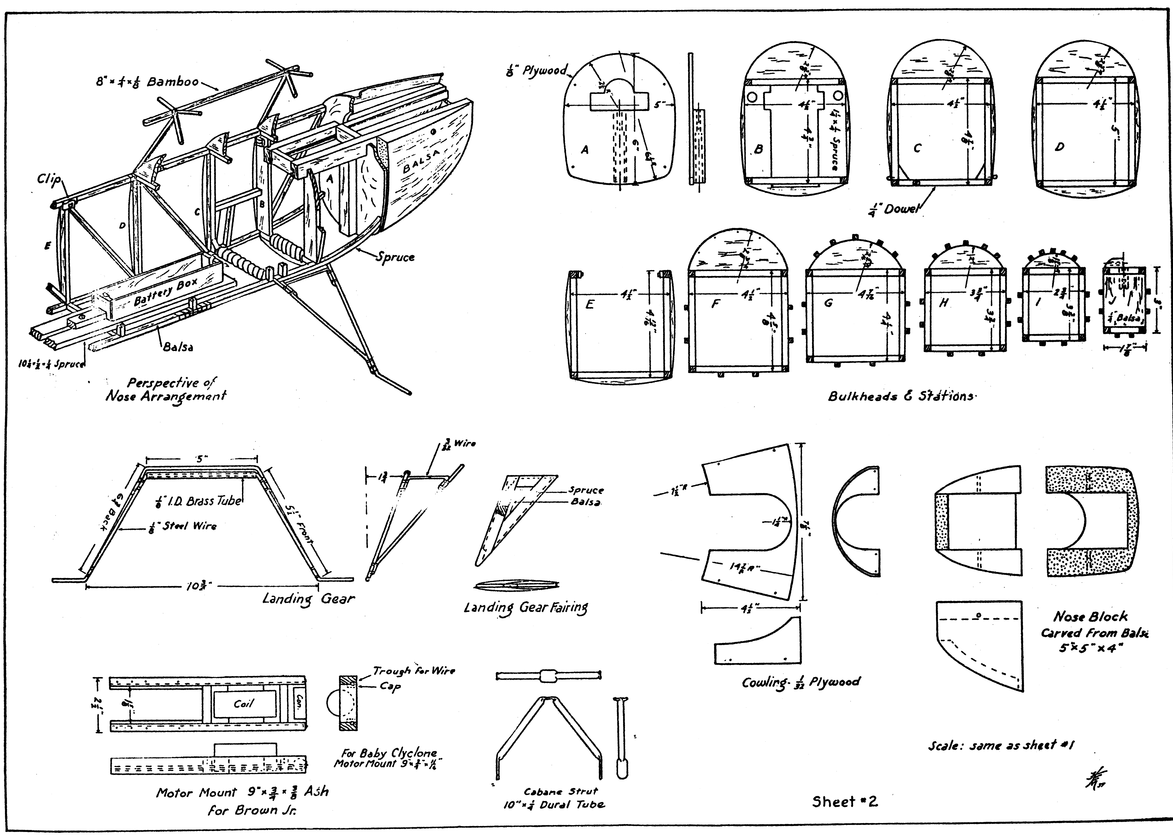
8" × ¼ × ⅛ Bamboo
Clip
Battery Box
Balsa
Spruce
Balsa
Spruce
Perspective of Nose Arrangement
⅛" Plywood
¼" Dowel
Bulkheads & Stations
I.D. Brass Tube
Steel Wire
Front
Rear
10⅜"
Landing Gear
Wire
Spruce
Balsa
Landing Gear Fairing
Cowling - 1/32 Plywood
Nose Block Carved From Balsa 5"×5"×4"
Coil
Trough for Wire
Cap
Motor Mount 9" × ⅜ × ⅜ Ash for Brown Jr.
For Baby Clyclone Motor Mount 9" × ⅜ × ⅛"
Cabane Strut 10" × ¼ Dural Tube
Scale: same as sheet #1
Sheet #2