MiG 15

DESIGNED BY

P.E. Norman

COPYRIGHT OF
THE AEROMODELLER PLANS SERVICE
38, CLARENDON RD., WATFORD, HERTS

ALL WOODS ARE BALSA UNLESS OTHERWISE STATED

SUMMARY OF WEIGHTS
(APPROXIMATE)

OZS	
5½	ENGINE, TANK & IMPELLER
1½	ENGINE MOUNT
5	WINGS & TAIL
9½	FUSELAGE
½	FIN
22 OZS.	

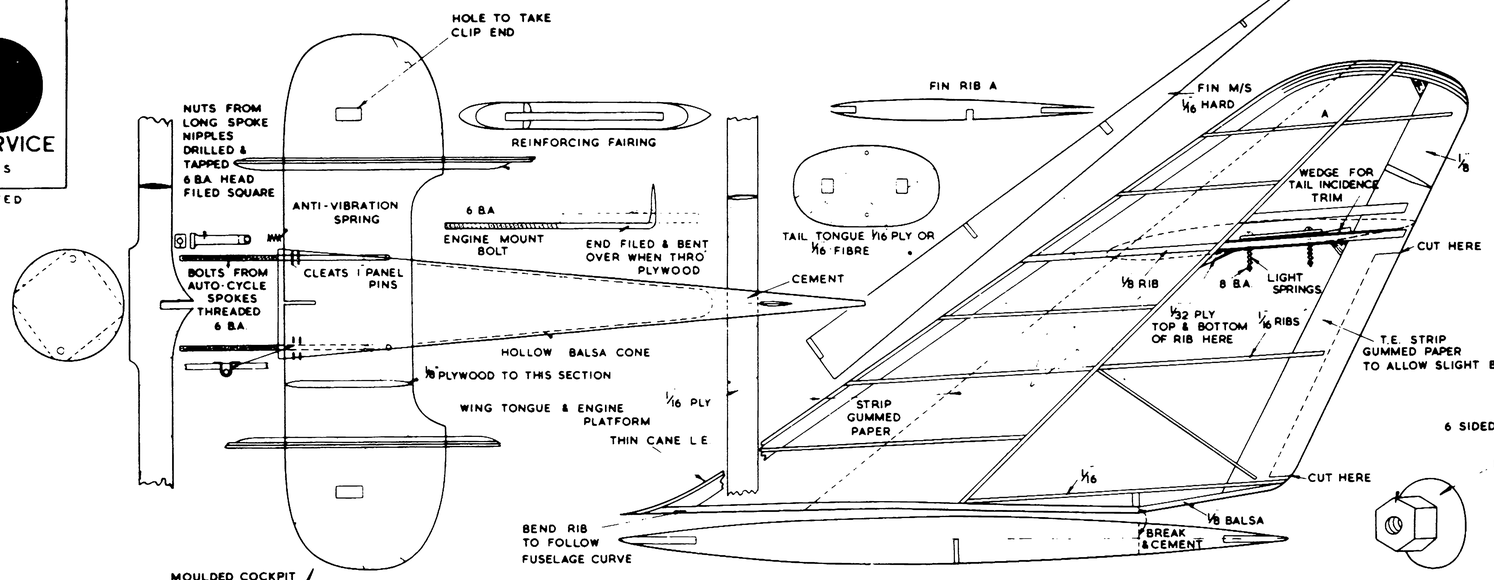

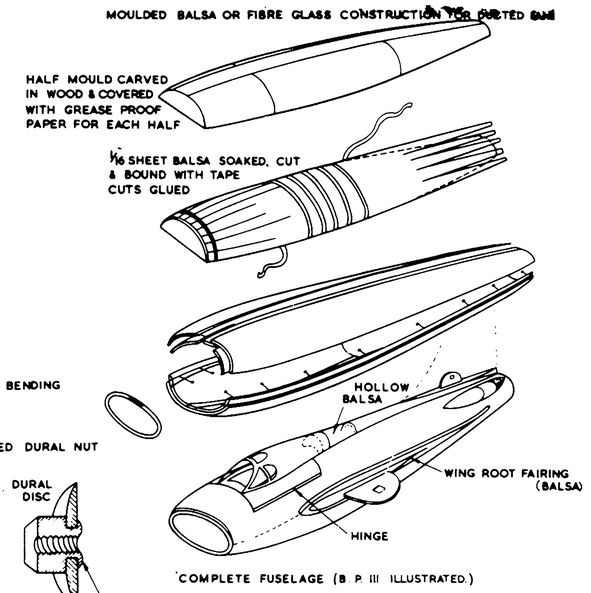

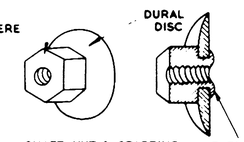

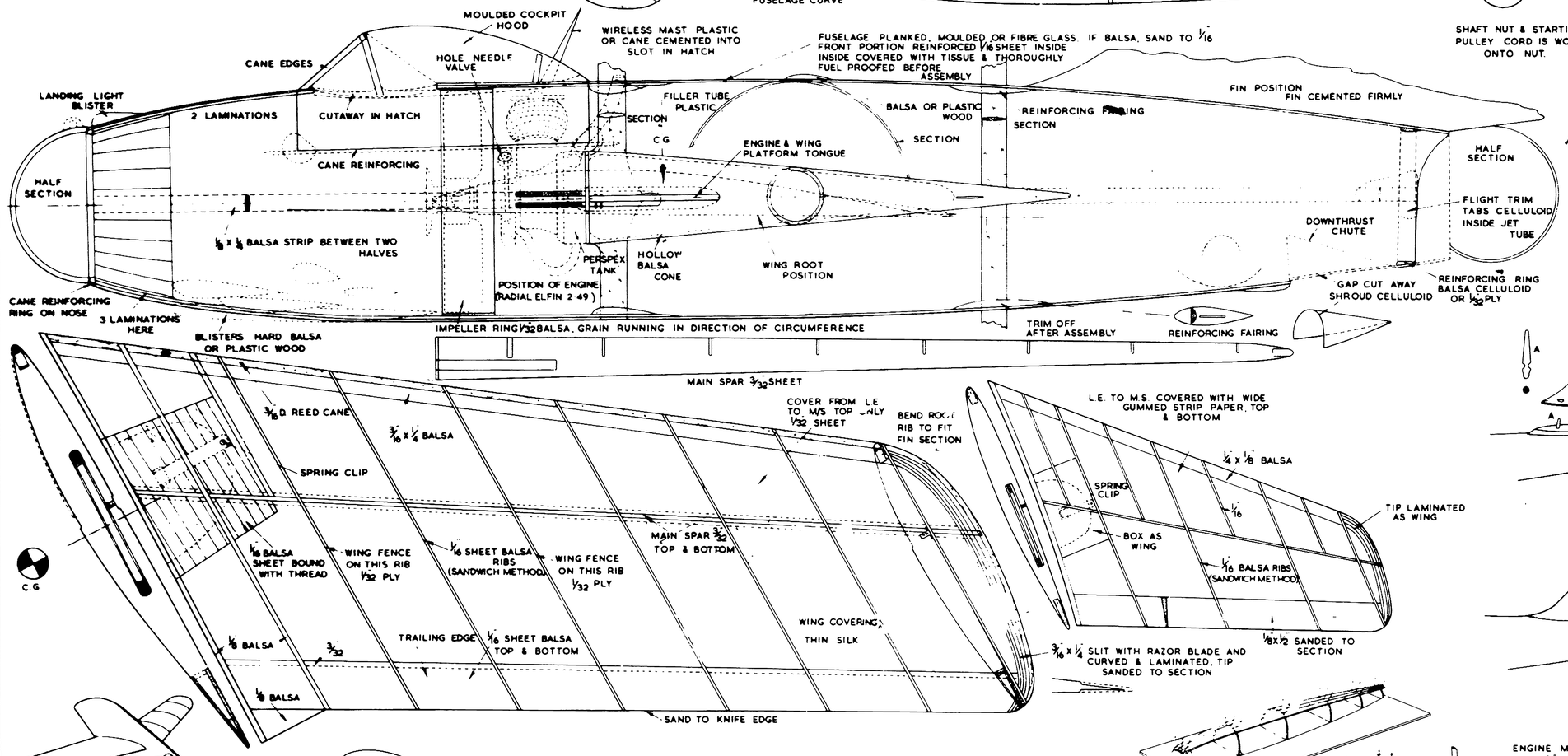

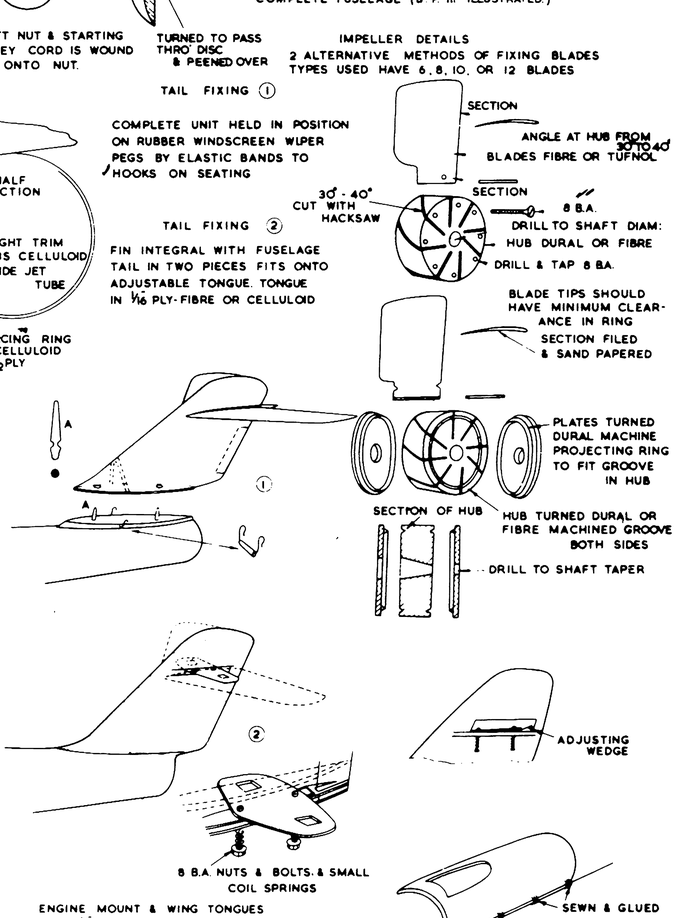

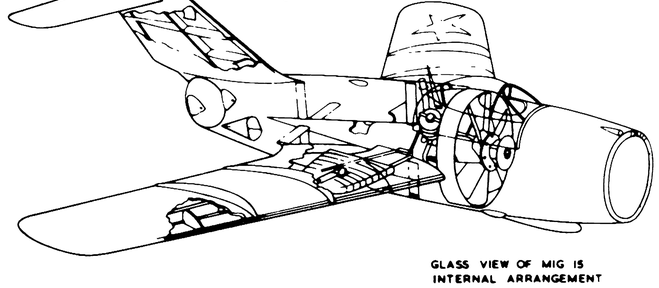

GLASS VIEW OF MIG 15 INTERNAL ARRANGEMENT

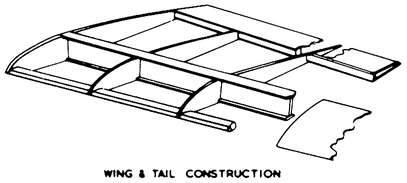

WING & TAIL CONSTRUCTION

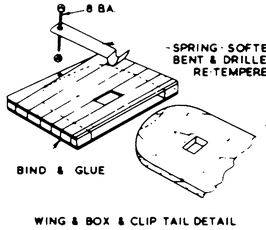

WING & BOX & CLIP TAIL DETAIL

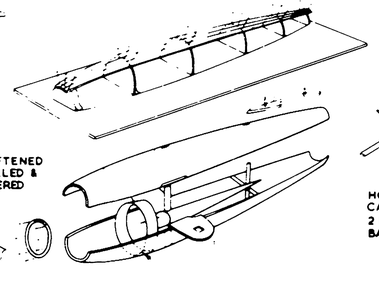

RING FROM 1/32 PLYWOOD WRAPPED, GLUED, & PINNED

PLANK CONSTRUCTION

PUBLISHED AEROMODELLER ANNUAL 1955 F.S.B. 603