"LONACH 1"

DESIGNED BY F.G. PERRY. DRAWN BY A.H.S.

BLADE AS SUPPLIED FOR VARIABLE PITCH AIRSCREW BY J.W. KENWORTHY WITH UNDERSIDE SLIGHTLY HOLLOWED.

LARGE SIZE PRESS STUD SOLDERED TO WIRE, GLUED & BOUND INTO GROOVES IN HUB.

EXHAUST CARVED FROM SOLID AND HOLLOWED

INTAKE CARVED FROM SOLID & HOLLOWED.

· FUSELAGE OUTLINE ·
1/3 FULL SIZE

1/16" x 1/4" ALL ROUND.

1/8" WIDE LAMINATED 1/32" HOOP. 1/16" THICK.

TOP OF DOWELS PLUG INTO BLOCK AS IN MILES KESTREL

MOTOR TUBE ENDS AT FORMER H.

1/16" SHEET

1/32" RIBS OVERLAID WITH 1/4" x 1/32" STRIPS

LEAVE LARGE OUTLINE STRINGERS PROJECTING 1/16

GLUE BACK SPAR TO TAILPOST WHEN ADJUSTMENT OF INCIDENCE IS DONE

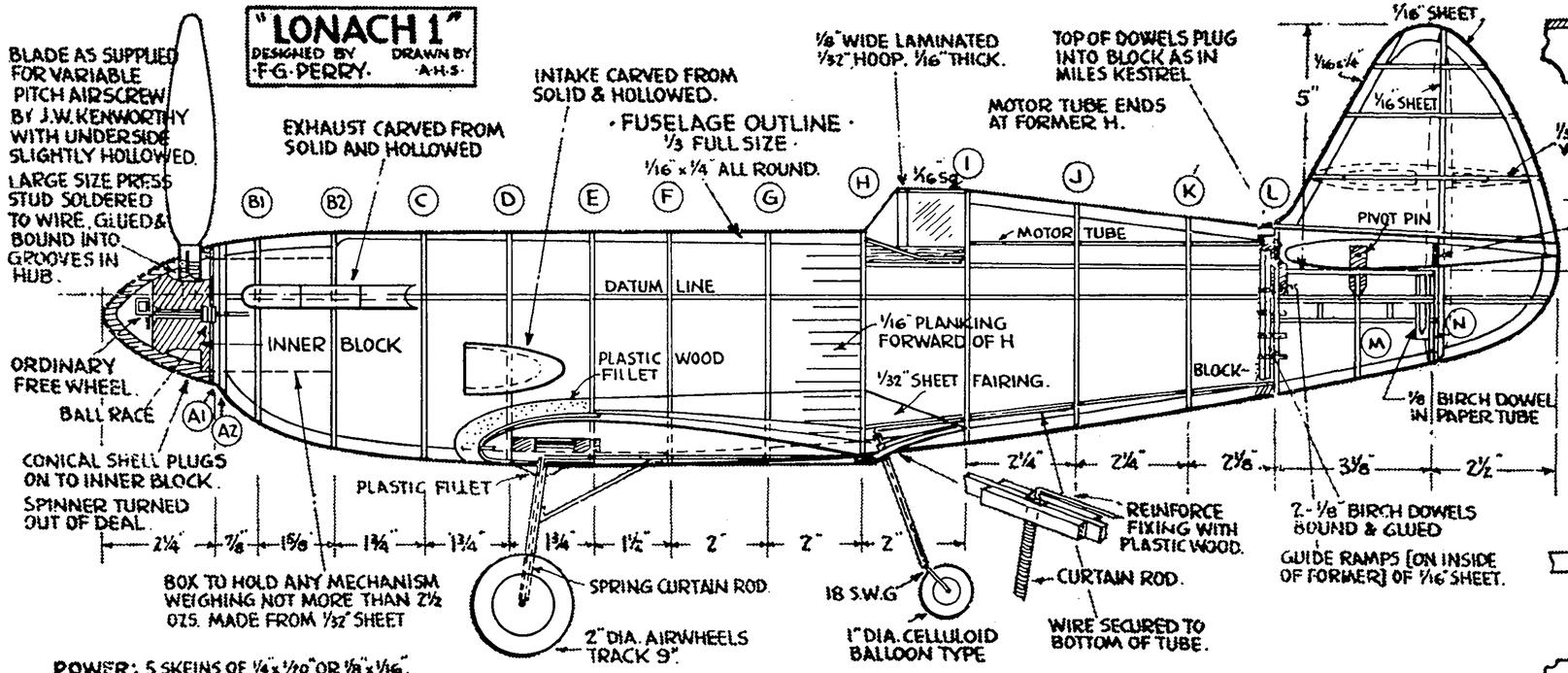

POWER: 5 SKEINS OF 1/4" x 1/20" OR 1/8" x 1/16". PITCH OF PROP IS VARIABLE & MUST BE DECIDED BY EXPERIMENT (VARIED BY TURNING UNFIXED HALF OF PRESS STUD.

BOTTOM PLANE OF AIRFOIL TO BE AT 0° INCIDENCE TO DATUM LINE.

STARBOARD TAILPLANE
· 1/3 FULL SIZE ·

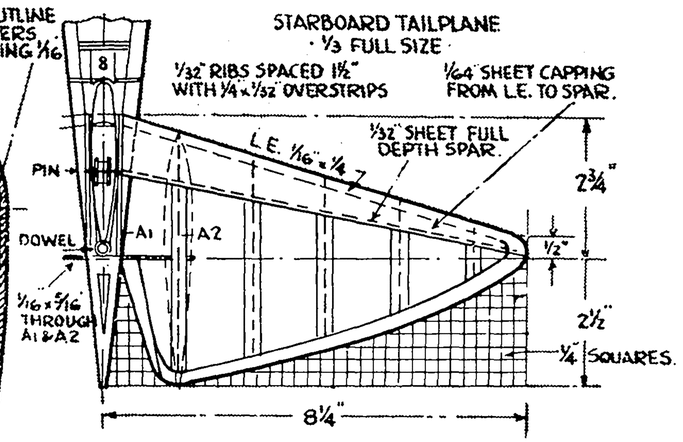

OUTSIDE WEIGHT IS 1 lb. · MODEL COULD BE BUILT TO ABOUT 13 OZS. IF SOME OF ITS VAST STRENGTH WERE SACRIFICED.

1/8" SQ.
1/8" SQ.
G
E
F
1/16" SHEET
1/8" SQ.
FAIRING.
1/16" SHEET

FULL SIZE HALF FORMERS

COVER WITH FINE TISSUE. GIVE 2 COATS OF FULL STRENGTH DOPE AND 1 OF HIGH GLOSS. GIVE PLANKING 2 COATS OF BANANA OIL WITH SANDINGS AFTER EACH & THEN 1 OF HIGH GLOSS.

FULL SIZE HALF FORMER OUTLINES H - N ALL FROM 1/16" SHEET.

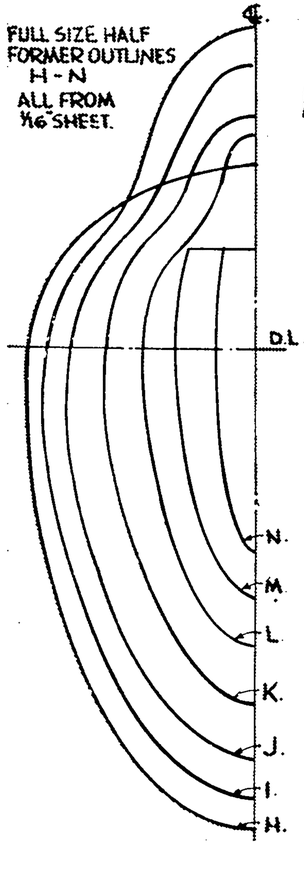

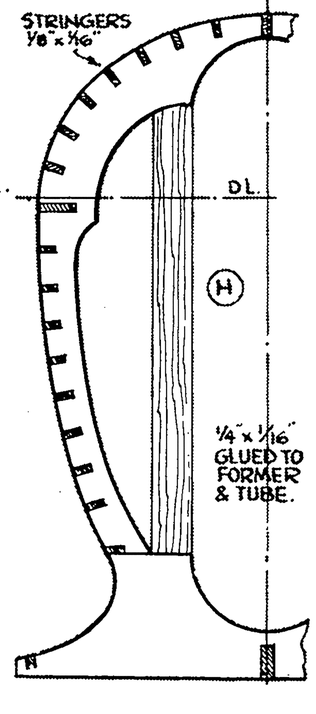

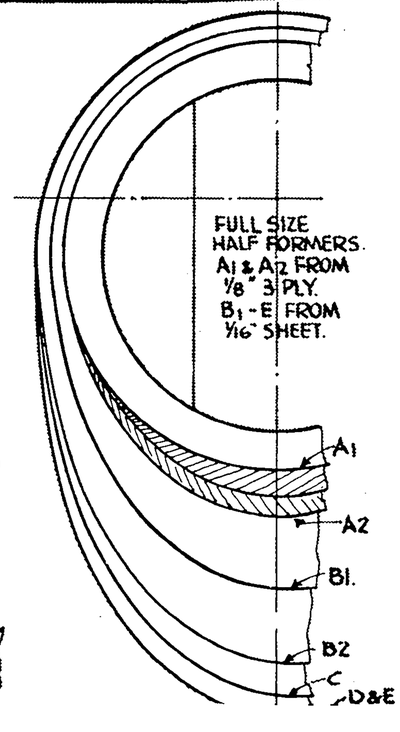

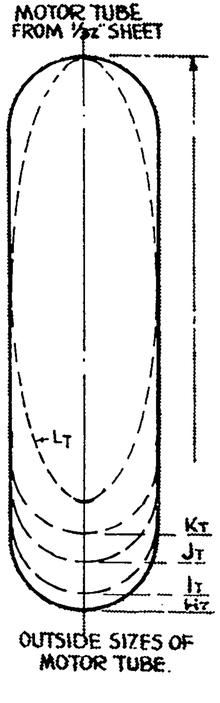

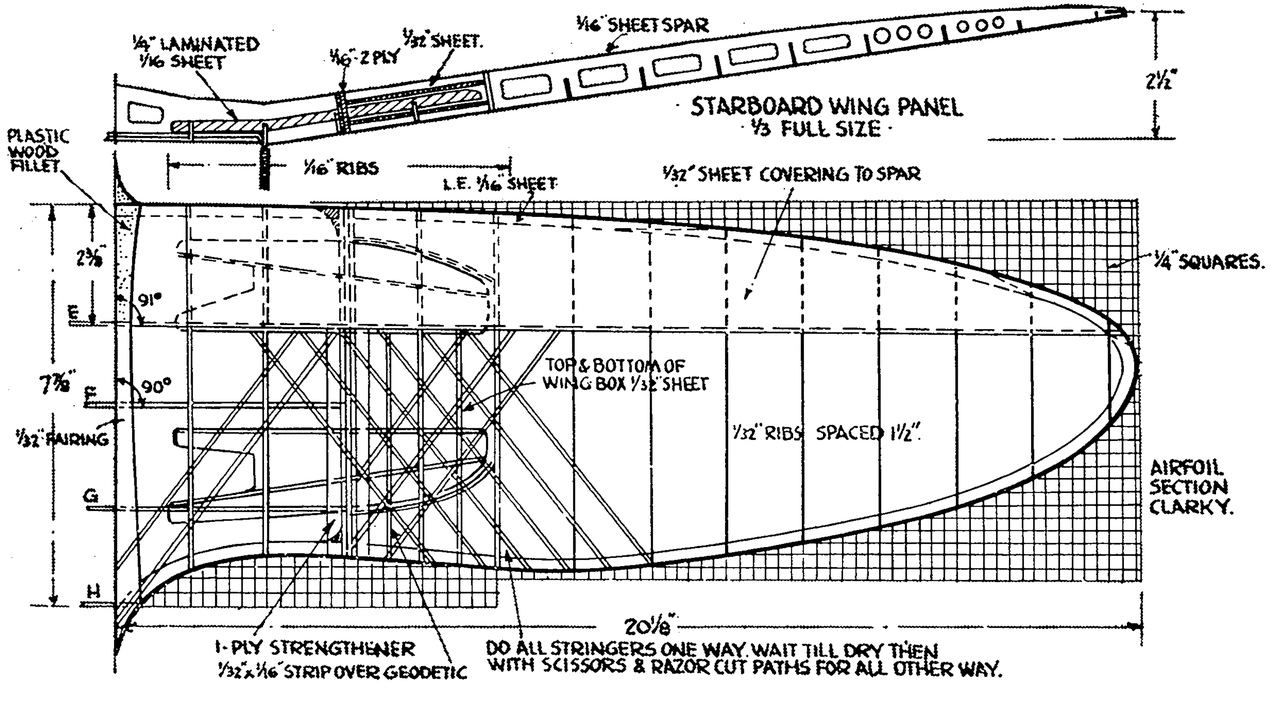

"LONACH 1"

DESIGNED BY F.G. PERRY. DRAWN BY A.H.S.

BLADE AS SUPPLIED FOR VARIABLE PITCH AIRSCREW BY J.W. KENWORTHY WITH UNDERSIDE SLIGHTLY HOLLOWED.

LARGE SIZE PRESS STUD SOLDERED TO WIRE, GLUED & BOUND INTO GROOVES IN HUB.

EXHAUST CARVED FROM SOLID AND HOLLOWED

INTAKE CARVED FROM SOLID & HOLLOWED.

· FUSELAGE OUTLINE ·
1/3 FULL SIZE

1/16" x 1/4" ALL ROUND.

1/8" WIDE LAMINATED 1/32" HOOP. 1/16" THICK.

TOP OF DOWELS PLUG INTO BLOCK AS IN MILES KESTREL

MOTOR TUBE ENDS AT FORMER H.

1/16" SHEET

1/32" RIBS OVERLAID WITH 1/4" x 1/32" STRIPS

LEAVE LARGE OUTLINE STRINGERS PROJECTING 1/16

GLUE BACK SPAR TO TAILPOST WHEN ADJUSTMENT OF INCIDENCE IS DONE

B1 B2 C D E F G H I J K L M N A1 A2

MOTOR TUBE

DATUM LINE

INNER BLOCK

PLASTIC WOOD FILLET

1/16" PLANKING FORWARD OF H

1/32" SHEET FAIRING.

BLOCK

PIVOT PIN

1/8" BIRCH DOWEL IN PAPER TUBE

ORDINARY FREE WHEEL.

BALL RACE

CONICAL SHELL PLUGS ON TO INNER BLOCK.

SPINNER TURNED OUT OF DEAL.

2¼" 7/8" 1⅝" 1¾" 1¾" 1¾" 1½" 2" 2" 2" 2¼" 2¼" 2⅛" 3⅛" 2½"

PLASTIC FILLET

BOX TO HOLD ANY MECHANISM WEIGHING NOT MORE THAN 2½ OZS. MADE FROM 1/32" SHEET

SPRING CURTAIN ROD

2" DIA. AIRWHEELS TRACK 9".

18 S.W.G

1" DIA. CELLULOID BALLOON TYPE

REINFORCE FIXING WITH PLASTIC WOOD.

CURTAIN ROD.

WIRE SECURED TO BOTTOM OF TUBE.

2-1/8" BIRCH DOWELS BOUND & GLUED

GUIDE RAMPS [ON INSIDE OF FORMER] OF 1/16" SHEET.

POWER: 5 SKEINS OF 1/4" x 1/20" OR 1/8" x 1/16". PITCH OF PROP IS VARIABLE & MUST BE DECIDED BY EXPERIMENT (VARIED BY TURNING UNFIXED HALF OF PRESS STUD.

BOTTOM PLANE OF AIRFOIL TO BE AT 0° INCIDENCE TO DATUM LINE.

STARBOARD TAILPLANE
· 1/3 FULL SIZE ·

1/32" RIBS SPACED 1½" WITH 1/4" x 1/32" OVERSTRIPS

1/64" SHEET CAPPING FROM L.E. TO SPAR.

1/32" SHEET FULL DEPTH SPAR.

L.E. 1/16" x 1/4"

PIN

DOWEL

1/16" x 5/16" THROUGH A1 & A2

A1 A2

2¾" ½" 2½" 1/4" SQUARES. 8¼"

OUTSIDE WEIGHT IS 1 lb. · MODEL COULD BE BUILT TO ABOUT 13 OZS. IF SOME OF ITS VAST STRENGTH WERE SACRIFICED.

1/8" SQ. FAIRING. 1/16" SHEET

· FULL SIZE HALF FORMERS ·

1/8" SQ. G. 1/8" SQ. E.

COVER WITH FINE TISSUE. GIVE 2 COATS OF FULL STRENGTH DOPE AND 1 OF HIGH GLOSS. GIVE PLANKING 2 COATS OF BANANA OIL WITH SANDINGS AFTER EACH & THEN 1 OF HIGH GLOSS.

FULL SIZE HALF FORMER OUTLINES H - N ALL FROM 1/16" SHEET.

℄

D.L. N. M. L. K. J. I. H.

STRINGERS 1/8" x 1/16"

D.L. H

1/4" x 1/16" GLUED TO FORMER & TUBE.

FULL SIZE HALF FORMERS. A1 & A2 FROM 1/8" 3 PLY. B1 - E FROM 1/16" SHEET.

A1 A2 B1. B2 C D&E

MOTOR TUBE FROM 1/32" SHEET

LT KT JT IT HT

OUTSIDE SIZES OF MOTOR TUBE.

STARBOARD WING PANEL
· 1/3 FULL SIZE ·

1/4" LAMINATED 1/16 SHEET

1/16" 2 PLY

1/32" SHEET.

1/16" SHEET SPAR

2½"

PLASTIC WOOD FILLET

1/16" RIBS

L.E. 1/16" SHEET

1/32" SHEET COVERING TO SPAR

2⅝" 91° E 7⅞" F 90° 1/32" FAIRING G H

TOP & BOTTOM OF WING BOX 1/32" SHEET

1/32" RIBS SPACED 1½".

1/4" SQUARES.

AIRFOIL SECTION CLARKY.

20⅛"

1-PLY STRENGTHENER 1/32" x 1/16" STRIP OVER GEODETIC

DO ALL STRINGERS ONE WAY. WAIT TILL DRY THEN WITH SCISSORS & RAZOR CUT PATHS FOR ALL OTHER WAY.