SHEET Nº 1.

The "VERON" "Stentorian"

72 ins SPAN PETROL MODEL.

WING AREA: 728 sq. ins: EXPERIMENTAL SECTION:
WEIGHT: 3¾ lbs. : LENGTH ... 53" :

DESIGNED EXPRESSLY FOR USE WITH THE "STENTOR" 6 c.c. ENGINE OR ANY ENGINE OF 6" TO 10 cc. SPARK IGNITION OR 3·5 cc. DIESEL UPWARDS.

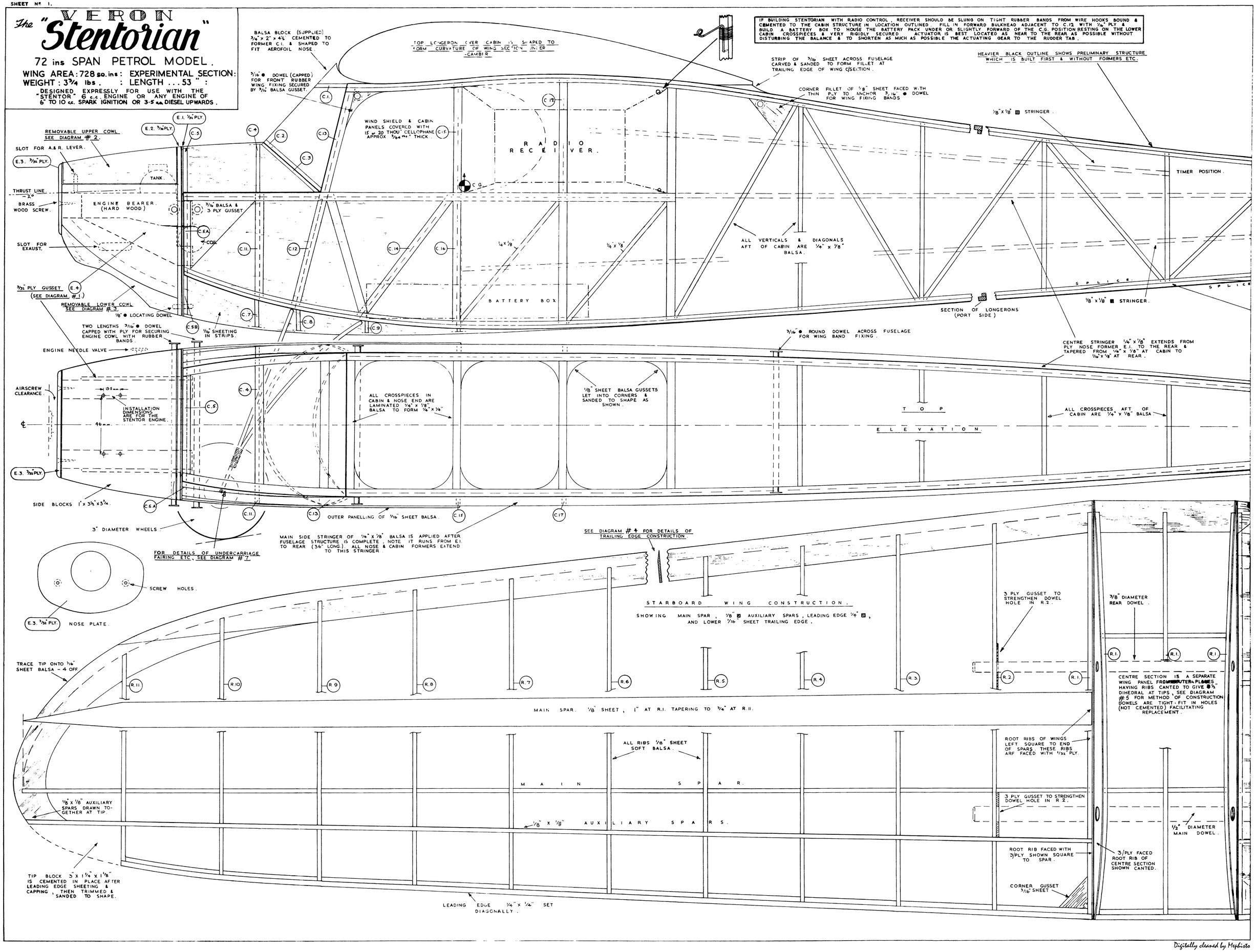

Digitally cleaned by Mephisto

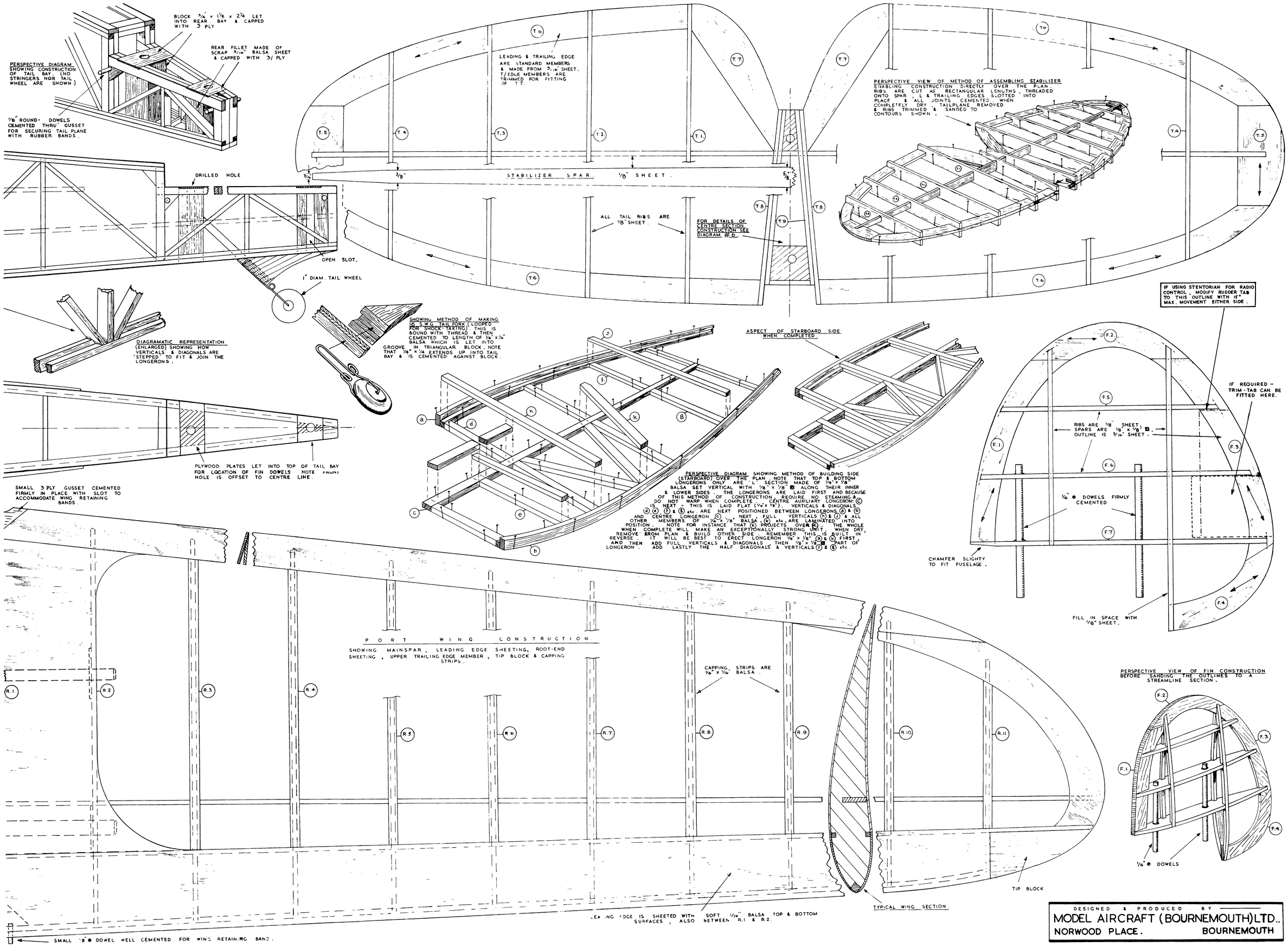

Digitally cleaned by Mephisto

DIAGRAMS & INSTRUCTION
SHEET FOR THE

"STENTORIAN"

72 ins. SPAN PETROL MODEL

TOGETHER WITH ALL FORMERS, RIB SECTIONS, AND OTHER SHAPED PARTS.

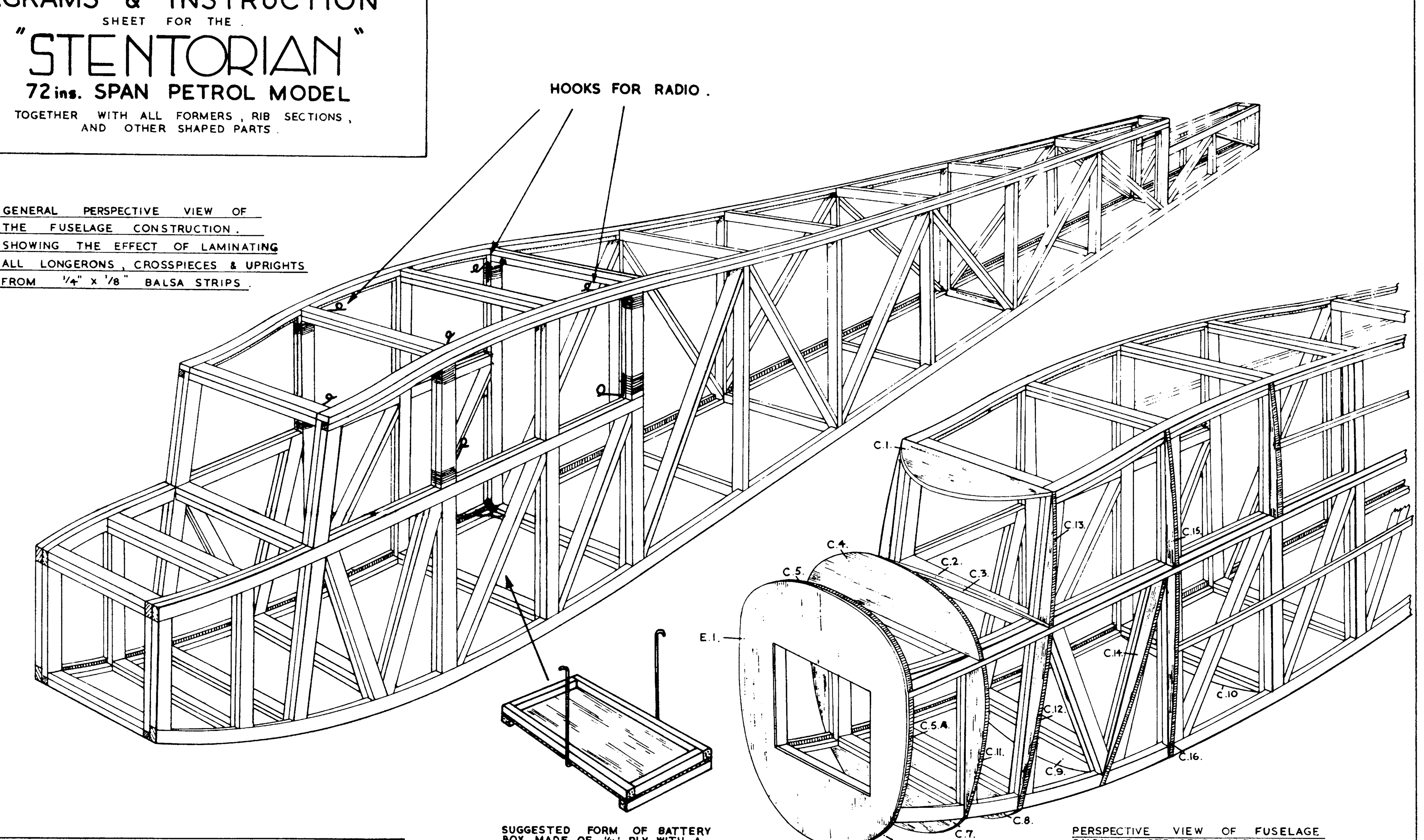

GENERAL PERSPECTIVE VIEW OF THE FUSELAGE CONSTRUCTION. SHOWING THE EFFECT OF LAMINATING ALL LONGERONS, CROSSPIECES & UPRIGHTS FROM 1/4" x 1/8" BALSA STRIPS.

SUGGESTED FORM OF BATTERY BOX MADE OF 1/16" PLY WITH A 1/4" x 1/4" RIM. BATTERIES ARE RETAINED BY 16 S.W.G WIRE CLIP & RUBBER BANDS. TRAY PERMITS MOVEMENT FOR BALANCE. SECURE BOX VERY FIRMLY TO CROSS-STRUTS WITH CEMENT & THREAD BINDING.

PERSPECTIVE VIEW OF FUSELAGE SHOWING STRUCTURE WITH ADDITION OF ALL NOSE FORMERS IN 1/8 SHEET & WITH ADDITIONAL 1/8" x 1/8" STRINGERS.

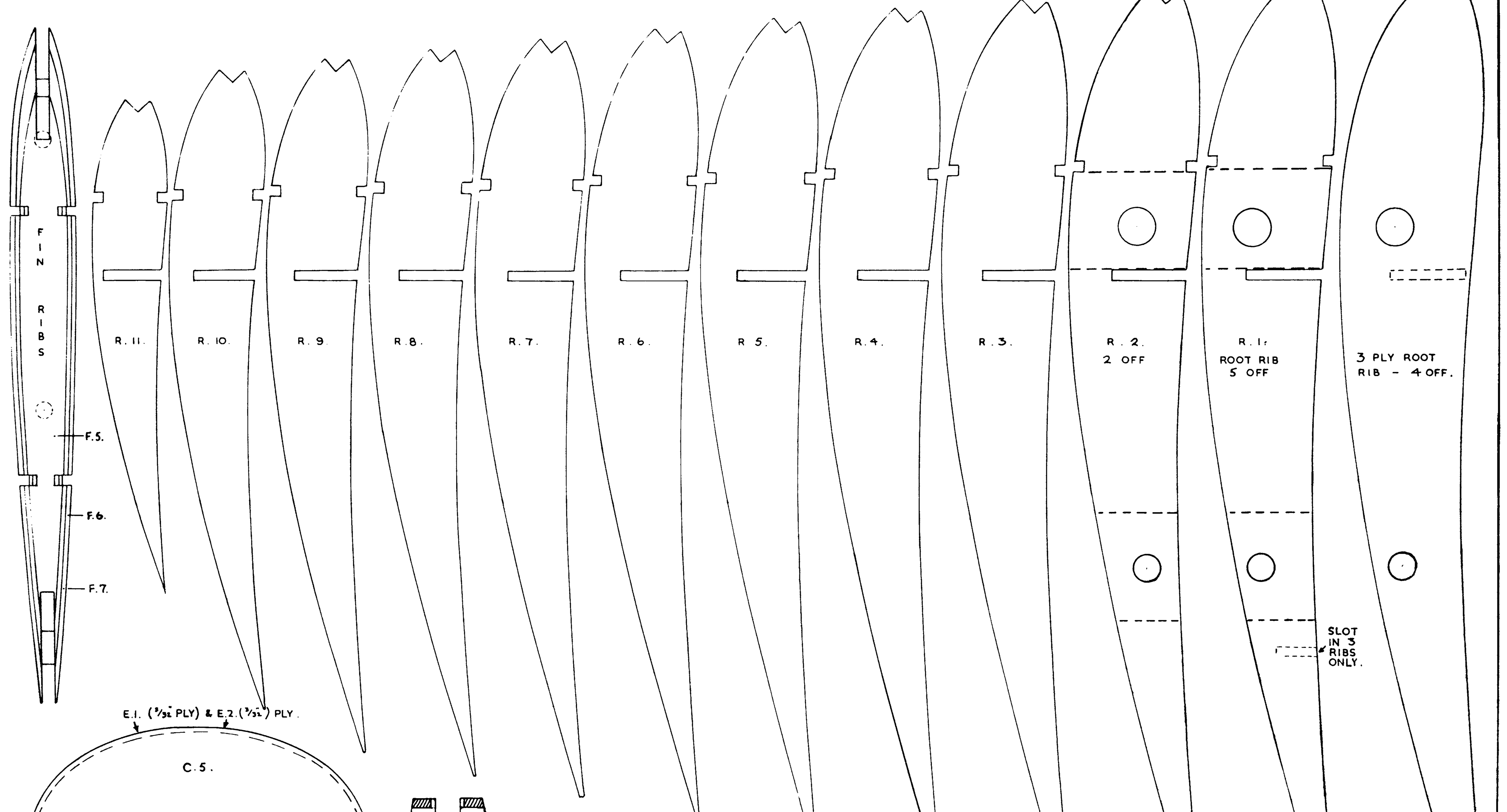

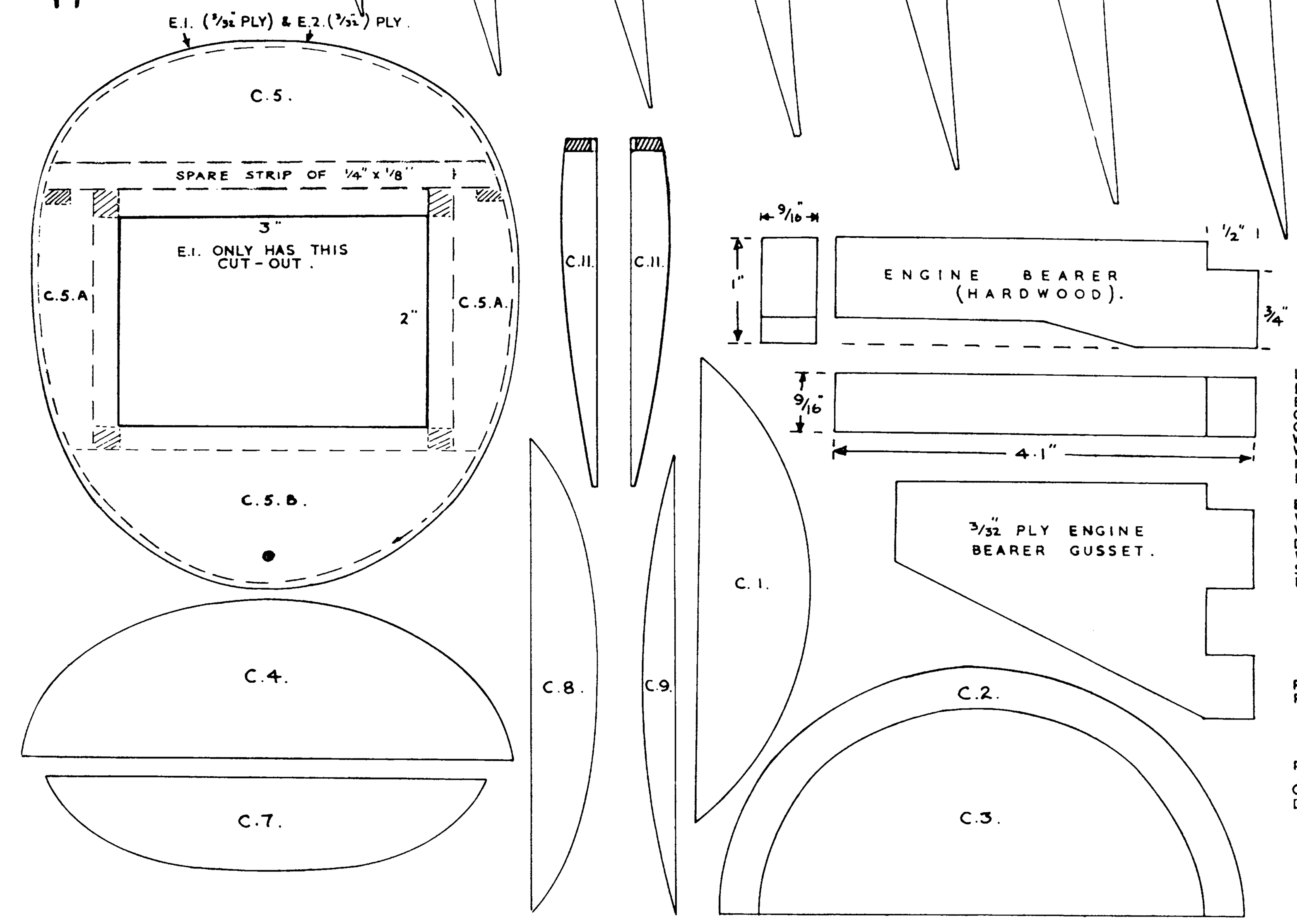

LIST OF MATERIALS.

LONGERONS, WING SPARS, STRINGERS & FIN SPARS.	1/8" x 1/8" x 36"	13 OFF.
LONGERONS, DIAGONALS, STRINGERS.	1/4" x 1/8" x 36"	30 OFF.
BATTERY BOX, U/C BRACING, GUSSETS.	3/16" x 2" x 36"	1
CABIN GUSSETS & U/C FAIRING.	1/8" x 3" x [illegible]	1
CABIN CELLOPHANE.	11" x 5½"	3
WING & STABILIZER SPAR.	1" x 1/8" x 36"	3
WING L/EDGE	1/4" x 1/4" x 36"	2
NOSE, L/EDGE & T/EDGE SHEETING.	1/16" x 3" x 36"	10
PLY NOSE FORMER.	3/32" x 5" x 5½"	1
" " "	1/32" x 3" x 5½"	1
ENGINE BEARERS - OBECHI.	4½" x 1" x 9/16"	2
WIRE 10 SWG X 36" — 2 OFF : 16 SWG X 18" & 20 SWG X 18" — 1 OFF EACH		
WHEELS. 1 PAIR 3" or 3½" WOODEN OR PNEUMATIC : 1 ONLY 1" TAIL-WHEEL		
DOWELS : 1/2", 3/8", 1/4", & 1/8". 12" OF EACH. 3/16" - 24" OFF		
WING RIBS. PLY RIB R.I. - 4 OFF : BALSA RIB R.I. - 5 off : BALSA RIBS R2		
SHAPED PART FOR STABILIZER OUTLINE (T6.) FROM 3/16" SHEET.		
BLOCK BALSA. CABIN TOP	3/4" x 2" x 4	
TOP NOSE	4¾" x 3¾" x 1	
SIDE NOSE	3¾" x 3¼" x 1	
LOWER NOSE	3¾" x 2¾" x 3"	
STERN BLOCK	2¼" x 1⅛" x 3/4"	
TAIL WHEEL	3" x 1" x 1"	
WING TIPS	3" x 1/4" x 1¼"	2
STABILIZER	3" x 1" x 3/4"	1
PLYWOOD.	6" x 3" x 1/32"	1
PRINTED SHEET BALSA. N°s 1, 2, 3, & 4.	(1/8" x 3¼" x 14")	1 OFF.
N° 5.	(1/8" x 3" x 12")	1 OFF
N° 6.	(3/16" x 3" x 12")	1
N° 7.	(3/16" x 3" x 12")	1
PRINTED 3-PLY. N° 8.	(3/32" x 3" x 12")	1
COVERING PAPER. (DOUBLE WITH "RAG" TISSUE).	LARGE SHEETS.	20
DOPE. CEMENT. SANDPAPER. TISSUE PASTE.	3 SHEETS PLAN	

DIAGRAM # 1.

DIAGRAMMATIC REPRESENTATION OF ENGINE BEARERS & THEIR FITTING TO FORMER E.2.

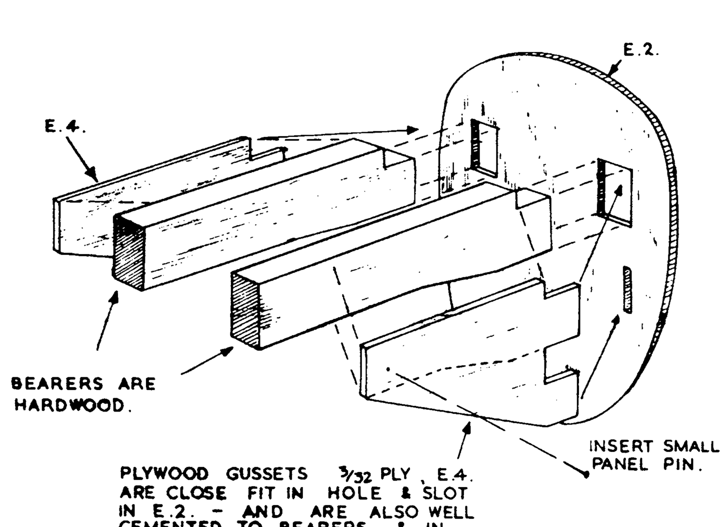

PLYWOOD GUSSETS 3/32 PLY, E.4. ARE CLOSE FIT IN HOLE & SLOT IN E.2. - AND ARE ALSO WELL CEMENTED TO BEARERS & IN SLOTS.

DIAGRAM #1A.

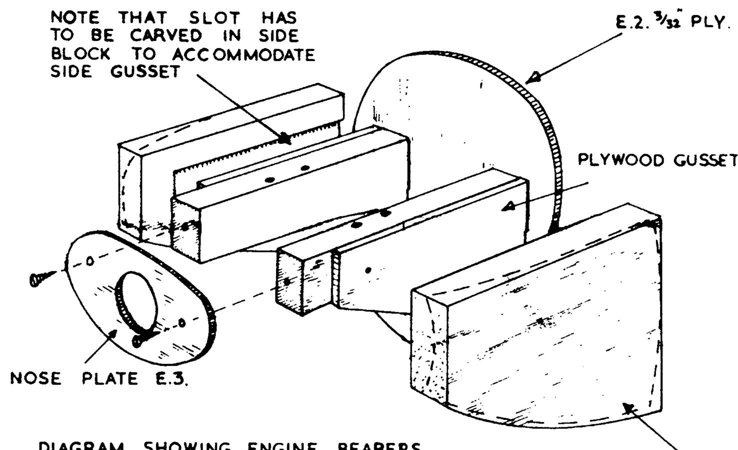

DIAGRAM SHOWING ENGINE BEARERS ASSEMBLED WITH GUSSETS TO FORMER E.2. WITH ADDITION OF SIDE BLOCKS & NOSE PLATE E3. (E.3. IS RETAINED ONLY BY TWO SCREWS TO FACILITATE ENGINE REMOVAL.

DIAGRAM # 1.B. VIEW SHOWING REAR OF ENGINE MOUNT WITH SIDE FAIRING BLOCKS SHAPED TO CONTOUR OF NOSE.

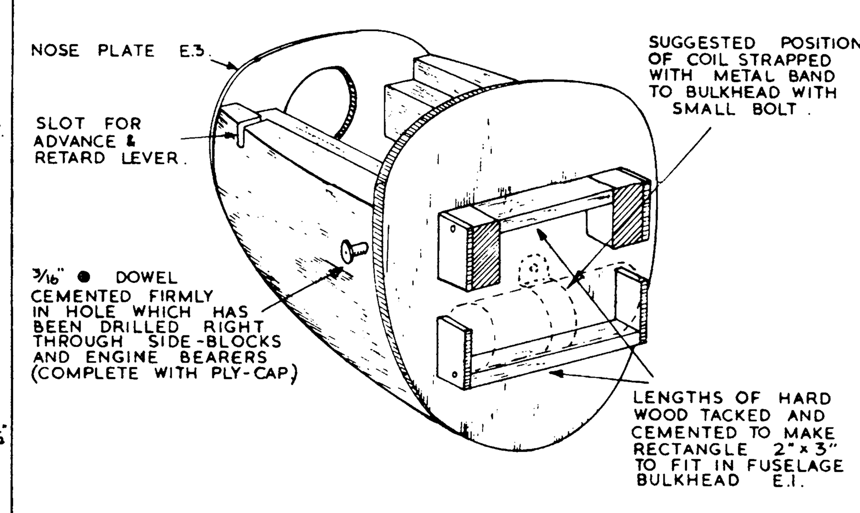

DIAGRAM # 2. METHOD OF MAKING UPPER COWL FOR ENGINE NACELLE.

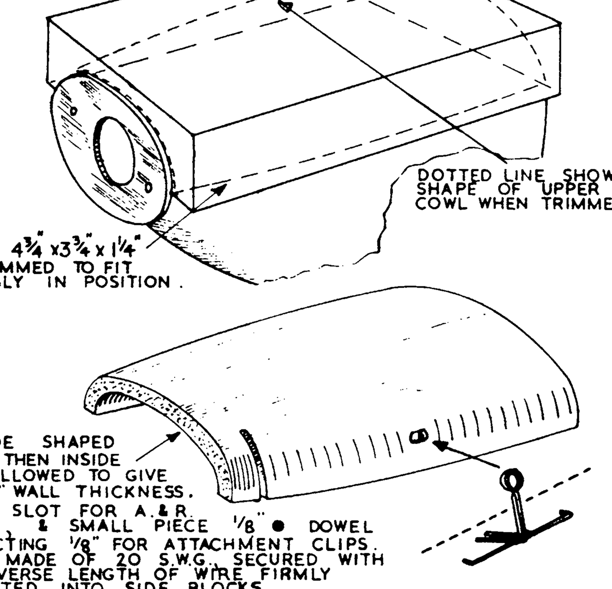

NOTE SLOT FOR A.&R. LEVER, & SMALL PIECE 1/8" ● DOWEL PROJECTING 1/8" FOR ATTACHMENT CLIPS. THESE MADE OF 20 S.W.G. SECURED WITH TRANSVERSE LENGTH OF WIRE FIRMLY CEMENTED INTO SIDE BLOCKS

DIAGRAM #3. METHOD OF MAKING LOWER COWL.

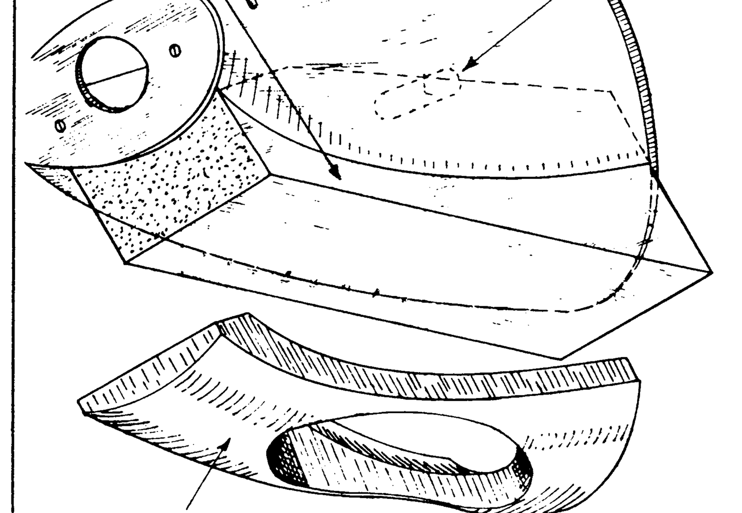

THEN INSIDE IS CUT AWAY & HOLLOWED OUT TO A 1/4" WALL. CIRCULAR HOLE IS THEN CUT (AT RIGHT ANGLES TO ENGINE BEARERS FOR CYLINDER.) THIS IS RETAINED BY 1/8" ● DOWEL PROJECTING THROUGH INTO FORMER E.I.

DIAGRAM # 4.

CONSTRUCTION OF MAINPLANE TRAILING EDGE. REQUIRED — 4 STRIP 1/16" SHEET BALSA 1" WIDE.

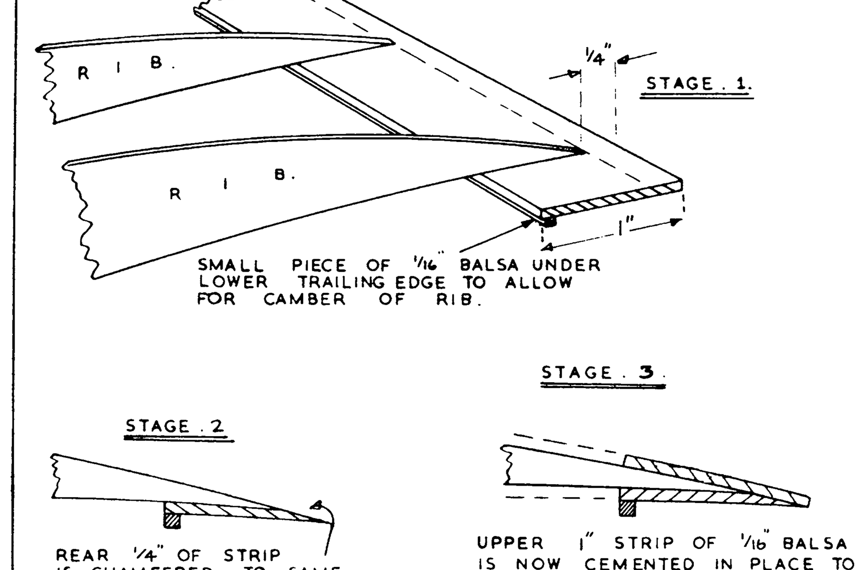

DIAGRAM # 5. CONSTRUCTION OF MAINPLANE CENTRE SECTION.

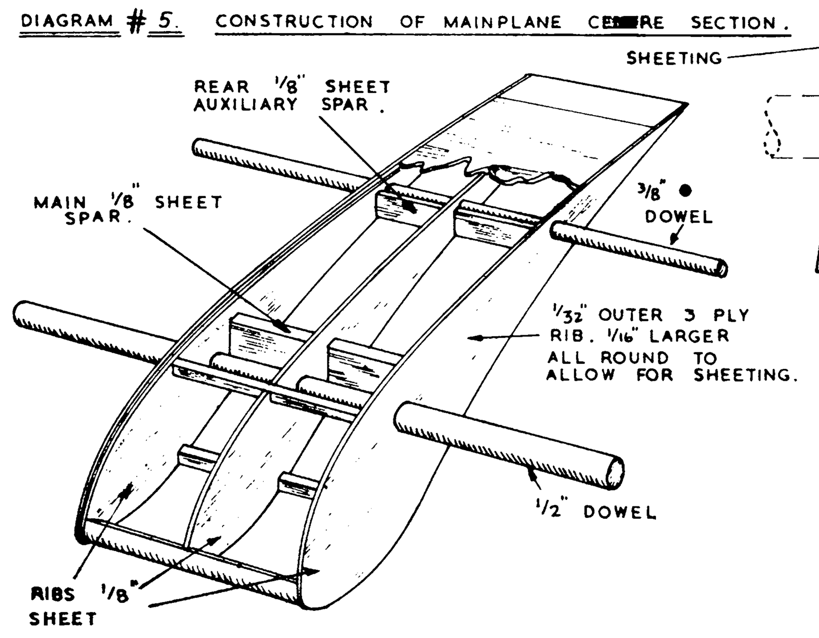

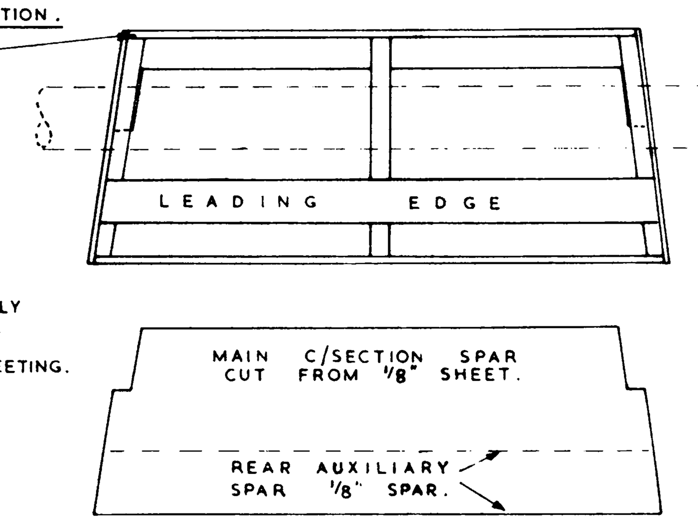

FRONT VIEW (TO SIZE) OF C/SECTION CONSTRUCTION SHOWING INCLINATION OF OUTER RIBS FOR M/P DIHEDRAL.

DIAGRAM # 6.

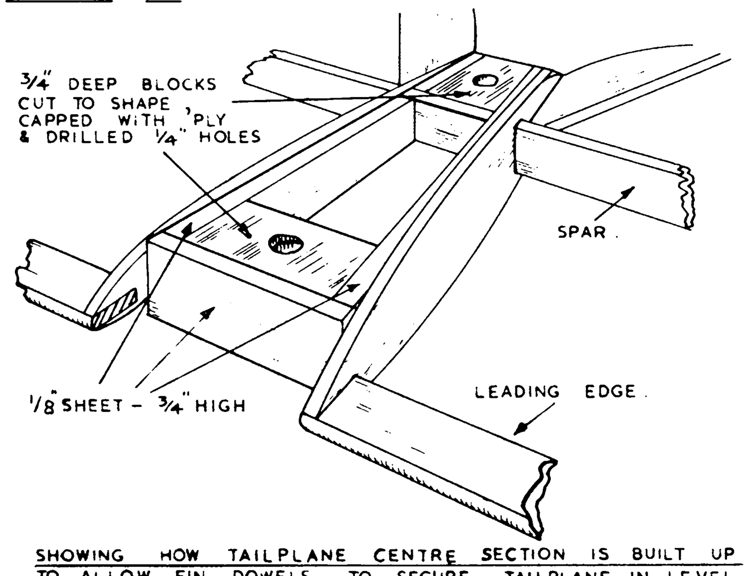

SHOWING HOW TAILPLANE CENTRE SECTION IS BUILT UP TO ALLOW FIN DOWELS TO SECURE TAILPLANE IN LEVEL POSITION ON STERN BAY.

B U I L D I N G   I N S T R U C T I O N S.

PLAN MUST FIRST BE JOINED. TRIM RIGHT HAND EDGE OF SHEET 1, ADHERE EDGES WITH PHOTO PASTE, BEFORE ANY CONSTRUCTION IS DONE, PLAN SHOULD BE COVERED WHERE IT IS REQUIRED WITH WAXED TISSUE. STUDY PLAN & CUT-OUT & IDENTIFY ALL PARTS BEFORE COMMENCING.

F U S E L A G E.

ENTIRE MAIN STRUCTURE IS OF 1/4"x1/8" BALSA (SEE PERSPECTIVE DIAGRAM & INSTRUCTIONS ON SHEET 2.) WHEN TWO HALVES ARE COMPLETE, SET UP SQUARELY & JOINED WITH CROSSPIECES AT CABIN. ALL CROSSPIECES AT THIS PART ARE 2 1/4"x1/8" LAMINATED. NEXT PULL REAR LONGERONS TOGETHER & JOIN WITH 3/16 BALSA FILLET AT END OF STERN BAY. CUT REMAINDER OF CROSSPIECES 1/4"x1/8" IN PAIRS (TOP & BOTTOM) & CEMENT IN POSITION. NEXT CEMENT FORMERS C.5, C.5.A, & C.5.B TO PLY FORMER E.I. (1/32" PLY) - LEAVING 1/16" OVERLAP FOR NOSE SHEETING. PULL NOSE LONGERON TOGETHER & CEMENT IN PLACE NOSE FORMER E.I. STEAM NOSE LONGERONS TO RELEASE TENSION IN THE WOOD. CHECK THAT BOTH FUSELAGE SIDES ARE EVEN, SQUARE & TRUE. PUT IN REMAINDER OF CROSSPIECES, MAIN SIDE STRINGERS & FORMERS C.1, 2, 3, & 4, C.7, 8, 9 & 11. STRIPS OF 1/4"x1/8" ARE CEMENTED IN PLACE & TRIMMED AND SANDED TO FIT FUSELAGE CONTOUR AT C.10, 12, 13, 14, 15 & 16. SEE DIAGRAM ON THIS PAGE.

10 S.W.G U/C WIRES ARE NEXT CUT & BENT TO SHAPE (DIAGRAM #7). THESE ARE BOUND VERY FIRMLY WITH HEAVY THREAD TO TWO LAMINATED CROSSPIECES & CEMENTED IN POSITION WITH 3/16" SHEET GUSSETS IN ALL CORNERS AT INTERSECTION OF CROSS PIECES & LONGERONS. NOTE THE ALTERNATIVE METHOD OF U/C SPRINGING IF WOODEN WHEELS ARE USED (#7). NOSE OF FUSELAGE SHOULD THEN BE SHEETED (AFTER FITTING REMAINING 1/8"x1/8" STRINGERS) WITH 1/16" SHEET. THIS IS DONE IN NARROW STRIPS. ON UNDERSIDE BETWEEN FORMERS C.5.B, C.7, 8, 9, & 10. ENGINE BEARERS & NACELLE ARE NEXT MADE. (FOLLOW DETAILS IN DIAGRAMS #1, 1A, 1B, 2 & 3) TO SUIT ENGINE USED. THIS IS MADE AS A "KNOCK OFF" UNIT & SECURED BY RUBBER BANDS ON 3/16" ROUND DOWELS SHOWN IN DIAGRAMS. ELECTRICAL CIRCUIT WIRES ARE TO BE CARRIED THRU' FORMER E.I INTO FUSELAGE. BATTERY BOX IS CONSTRUCTED (WHEN MODEL IS COMPLETE) & SITUATED IN PLACE MOST CONVENIENT FOR BALANCING. SIDE VIEW OF FUSELAGE SHOWS THE APPROX. POSITION WHEN USING 'NIFE' BATTERY (8½ OZS). BOX IS BEST MADE AS A "TROUGH" WITH 3/16" SHEET SUPPLIED, USING WIRE HOOP UNDER TROUGH & LOOPED FOR SECURING BATTERY WITH RUBBER BANDS. THIS ALLOWS FORE & AFT MOVEMENT FOR BALANCING. FIT TIMER WHERE BEST SUITED - SUGGESTED IN LAST BAY BEFORE THE FIN. FIT WINDSHIELD.

S T A B I L I Z E R.

IS CONSTRUCTED OVER PLAN USING RIBS CUT AS RECTANGLES, SLOTTED ONTO SPAR WITH LEADING AND TRAILING EDGES LET IN (AS SHOWN & DESCRIBED ON SHEET TWO). FILL IN C/SECTION BLOCKS (DIAG #6) WITH DOWEL HOLES FOR FIN. WITH THESE HOLES ASCERTAINED POSITION BLOCKS IN STERN BAY OF FUSELAGE (SHEET 2) & CAP WITH PLY AS DETAILED. THEN DRILL HOLES FOR 1/4" DOWEL. TAIL-WHEEL AND TAIL WHEEL BLOCK SHOULD THEN BE FITTED. SEE DRAWING SHEET 2. MAKE SURE THAT STABILIZER WHEN TRIMMED & SANDED, FITS SNUGGLY OVER STERNBAY AND THAT CHORD IS PARALLEL TO FUSELAGE DATUM.

F I N.

CEMENT REAR 1/8"x1/8" SPARS INTO SLOTS IN 3 RIBS F5, 6 & 7. THEN FRONT 1/8"x1/8" SPARS & CHECK FOR SQUARENESS. OUTLINES F.1, 2, 3 & 4 ARE THEN ADDED. SAND OUTLINES MEMBERS TO A STREAMLINE, ROUNDED LEADING-EDGE, SHARP TRAILING EDGE. INSERT DOWELS FOR FIXING TO THE FUSELAGE, AND CEMENT FIRMLY. IF REQUIRED, MAKE TRIM TAB.

M A I N P L A N E S.

ARE BUILT IN THREE PARTS, PORT, STARBOARD, & CENTRE SECTION. CAN HOWEVER BE BUILT AS ONE PIECE IF DESIRED. SLOT ALL RIBS ONTO SPARS. PIN RIBS ERECT OVER EACH POSITION ON PLAN & JIG UP THE SPAR 3/16" AT ROOT UNDER RIB R.I. & 1/16" AT TIP UNDER RIB R.11. SLOT LOWER 1/8"x1/8" SPAR INTO POSITION & CEMENT. THEN UPPER 1/8"x1/8" SPAR. PIN LOWER SHEET OF TRAILING EDGE UNDER RIB ENDS, SEE DIAG. #4. AND PACK UP SO LEVEL WITH UNDERCAMBER OF RIBS. THEN CEMENT EACH RIB END FIRMLY. COMPLETE TRAILING EDGE CONSTRUCTION INCLUDING SWEEP ROUND TO 1/8"x1/8 SPARS WHICH ARE PULLED EVENLY TOGETHER AT TIP. REMOVE FROM BOARD & CEMENT FIRMLY IN PLACE END PLY RIB TO R.I. ALLOWING 1/16" OVERLAP ALL ROUND FOR SHEETING - THIS HAVING ALSO TWO HOLES CUT FOR DOWELS. SHEET LOWER LEADING EDGE FIRST & WHEN QUITE DRY PIN WING TO BOARD AGAIN & ADD TOP SHEETING. ONLY WHEN QUITE DRY, REMOVE FROM BOARD & ADD 3 PLY GUSSETS FOR DOWEL HOLES IN RIB R.2. CHECK FIT OF THE DOWELS & THAT THEY ARE PARALLEL. NEXT, COMPLETE SHEETING BETWEEN R.I. & 2. ADD 1/4"x1/16" CAPPING STRIPS. THEN LASTLY, THE TIP BLOCK. THIS PROCEDURE IS IDENTICAL FOR THE TWO WING HALVES. FOR CENTRE SECTION, CEMENT FIRMLY TOGETHER PLY RIB R.I. TO BALSA RIB R.I. (LEFT & RIGHT HAND.). PUT THE TWO 12" DOWELS, ONE 1/2" & ONE 3/8" THRU' THESE & SET UP ON A BOARD WITH TWO OUTER WINGS IN POSITION (WITH TIPS BLOCKED UP FOR 3½" DIHEDRAL). NEXT PUT IN POSITION 2 C/SECTION SPARS, (DIAG. #5), & CEMENT. IT WILL FOLLOW THAT THE WING PANELS WILL THUS ENSURE THAT THE TWO C/SECTION RIBS R.I. ARE AT CORRECT ANGLE TO WING RIBS R.I. THEN WHEN QUITE SET REMOVE OUTER WING PANELS & ADD LEADING & TRAILING EDGES & CENTRE RIB & SHEETING TO CENTRE SECTION. DOWELS ARE NOT IN ANY WAY CEMENTED & ARE THUS REPLACEABLE. ADD NEXT TWO SMALL PLY GUSSETS AT REAR INBOARD TIP & 1/8" ● DOWEL AT FRONT INBOARD TIP OF WINGS FOR RETENSION TO FUSELAGE BY RUBBER BANDS.

C O V E R I N G.

SPECIAL 'RAG' TISSUE IS PROVIDED WHICH REQUIRES CAREFUL HANDLING WHEN APPLIED WITH TISSUE PASTE (SUPPLIED). ALL PARTS ARE DOUBLE COVERED. NO WATER SHRINKING IS NECESSARY & TWO COATS OF DOPE ARE SUFFICIENT.

MODEL WHEN ASSEMBLED WITH THE ENGINE, COIL & CONDENSER, TIMER AND BATTERY SHOULD BALANCE WITH NOSE 5° DOWN ON C.G. POINT. (UNDER MAIN SPAR).

FIRSTLY, CHECK THE GLIDE AND ENSURE THAT THEY IS CORRECT BEFORE POWERED FLIGHT.

NOTE THAT 2° DOWNTHRUST BUILT INTO THE ENGINE BEARER THERE IS NO SIDE THRUST AS TORQUE REACTION IS OFFSET THE FIN.

MODEL SHOULD CLIMB IN 200 FT LEFT HAND CIRCLES.

DIAGRAM # 7.

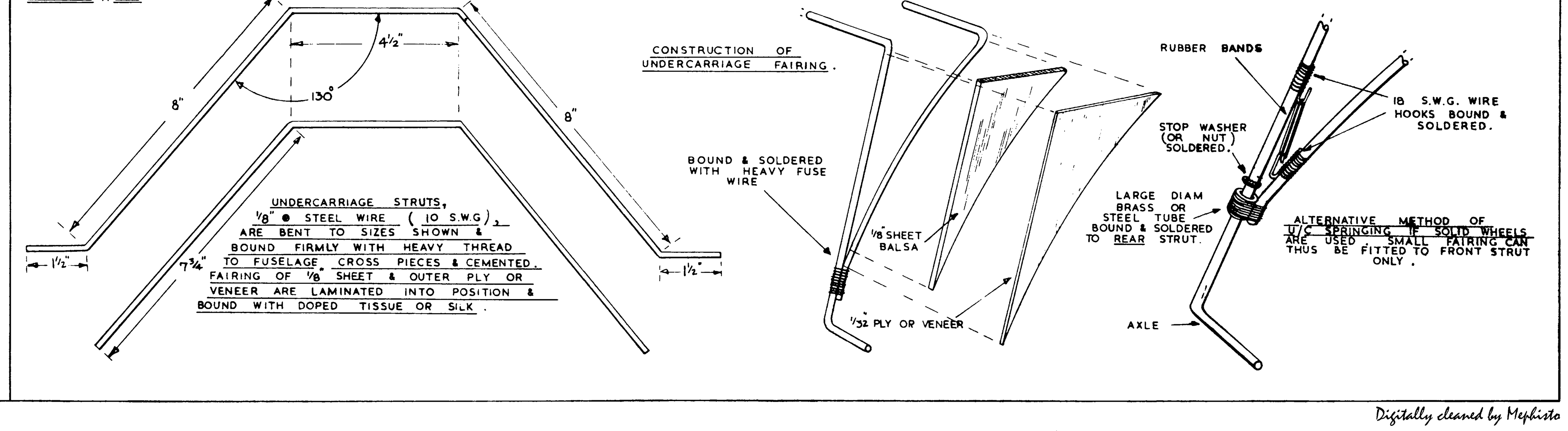

UNDERCARRIAGE STRUTS, 1/8" ● STEEL WIRE (10 S.W.G), ARE BENT TO SIZES SHOWN & BOUND FIRMLY WITH HEAVY THREAD TO FUSELAGE CROSS PIECES & CEMENTED. FAIRING OF 1/8" SHEET & OUTER PLY OR VENEER ARE LAMINATED INTO POSITION & BOUND WITH DOPED TISSUE OR SILK.

ALTERNATIVE METHOD OF U/C SPRINGING IF SOLID WHEELS ARE USED. SMALL FAIRING CAN THUS BE FITTED TO FRONT STRUT ONLY.

Digitally cleaned by Mephisto