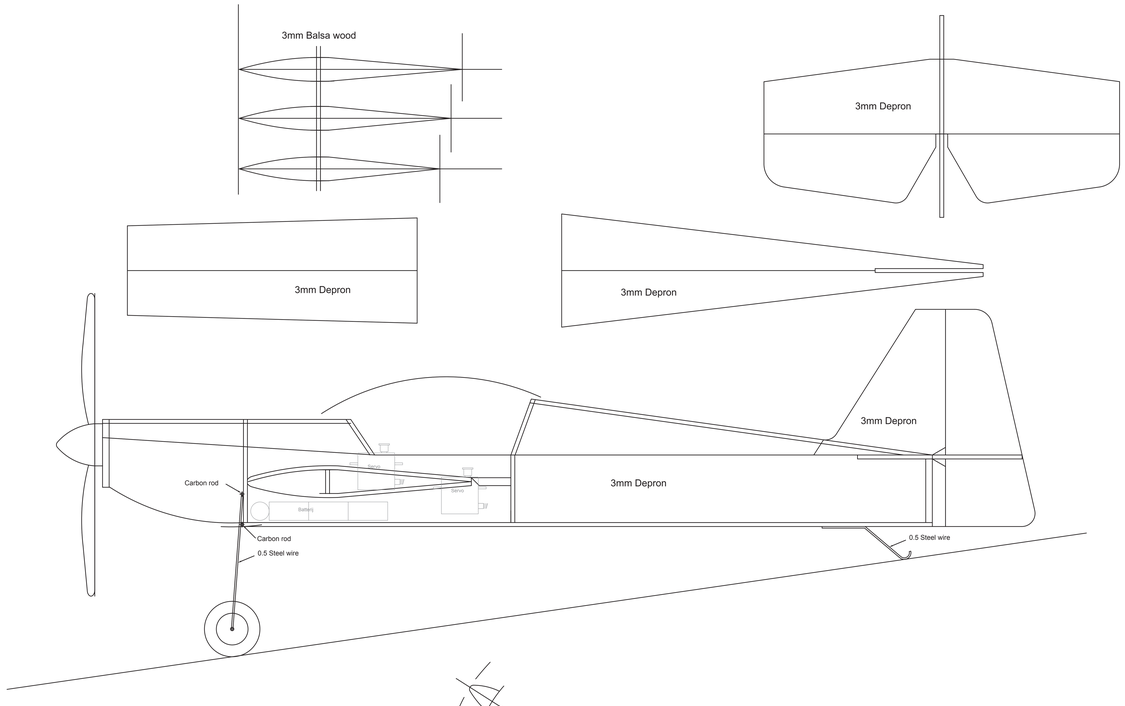
3mm Balsa wood
3mm Depron
3mm Depron
3mm Depron
3mm Depron
3mm Depron
Carbon rod
Carbon rod
0.5 Steel wire
0.5 Steel wire
Battery
Servo
Servo

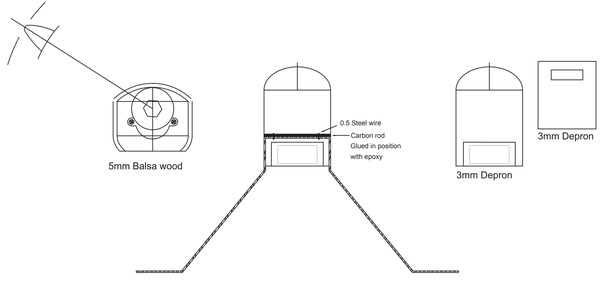
5mm Balsa wood
0.5 Steel wire
Carbon rod
Glued in position
with epoxy
3mm Depron
3mm Depron

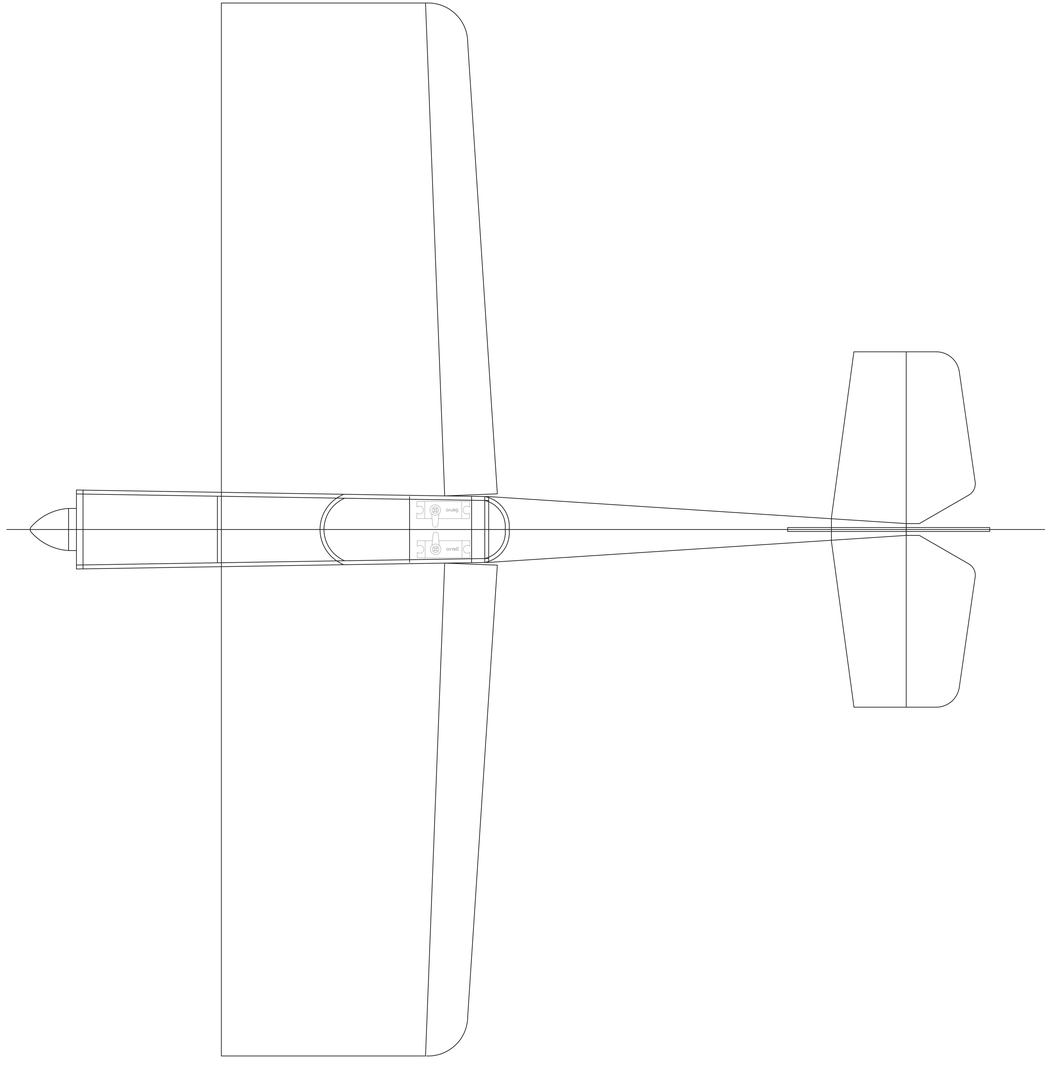
SERVO
SERVO

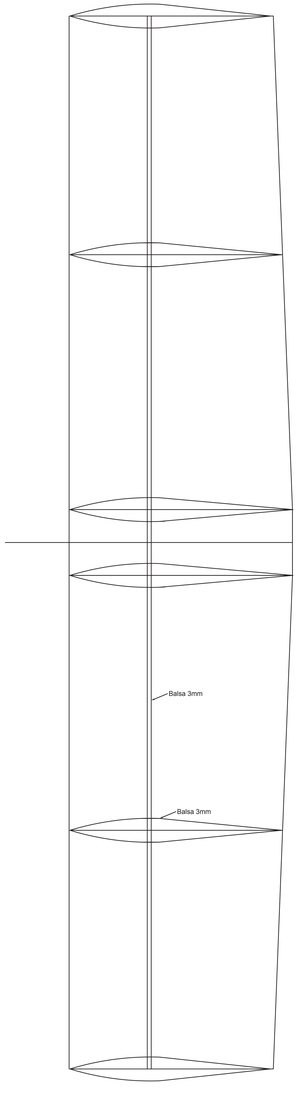
Balsa 3mm
Balsa 3mm