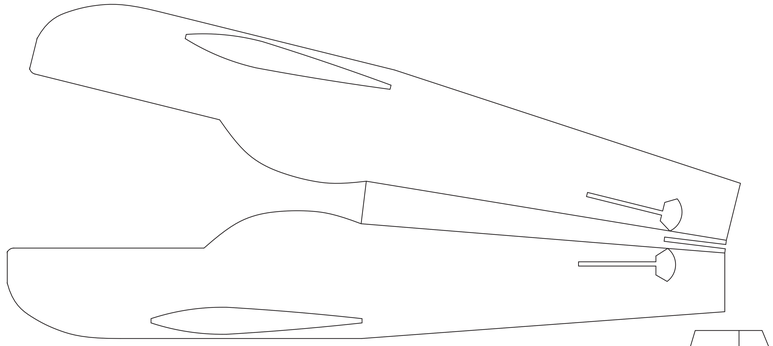

3mm Depron

Before folding the wing on the leading edge,
first tape this part so it won't crack.
Use only tape for this part to reduce weight.
Don't tape the entire plane.....

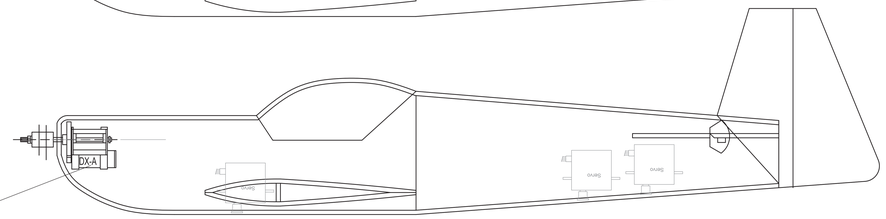

Servo's in the tail for direct
steering connections.

sand the inside of the wing
to made a sharp leading edge (3mm)

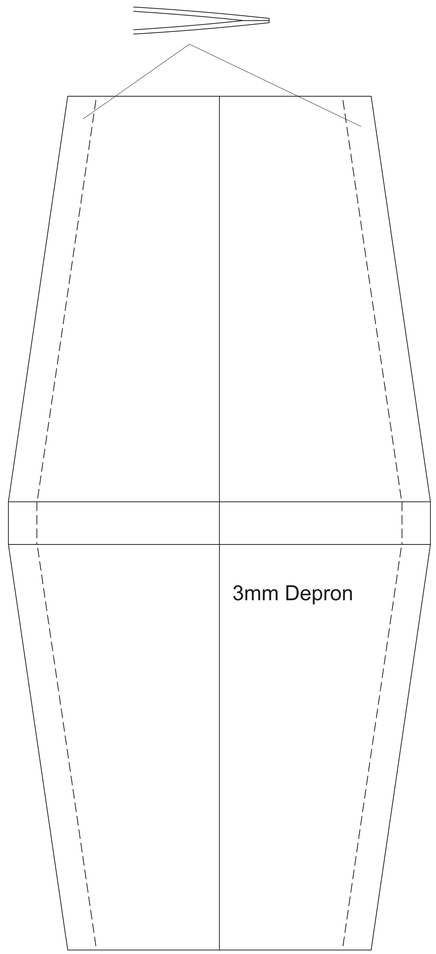

3mm Depron

GWS DX-A
with a EDF50 4,8V
motor. The thrust is
about 200 grams

For the battery I use the
new Li-Poly cells.
2 cell 560 or 1020 mAh

This way the AUW is going
to be around 150 grams.
So unlimited vertical is
possible

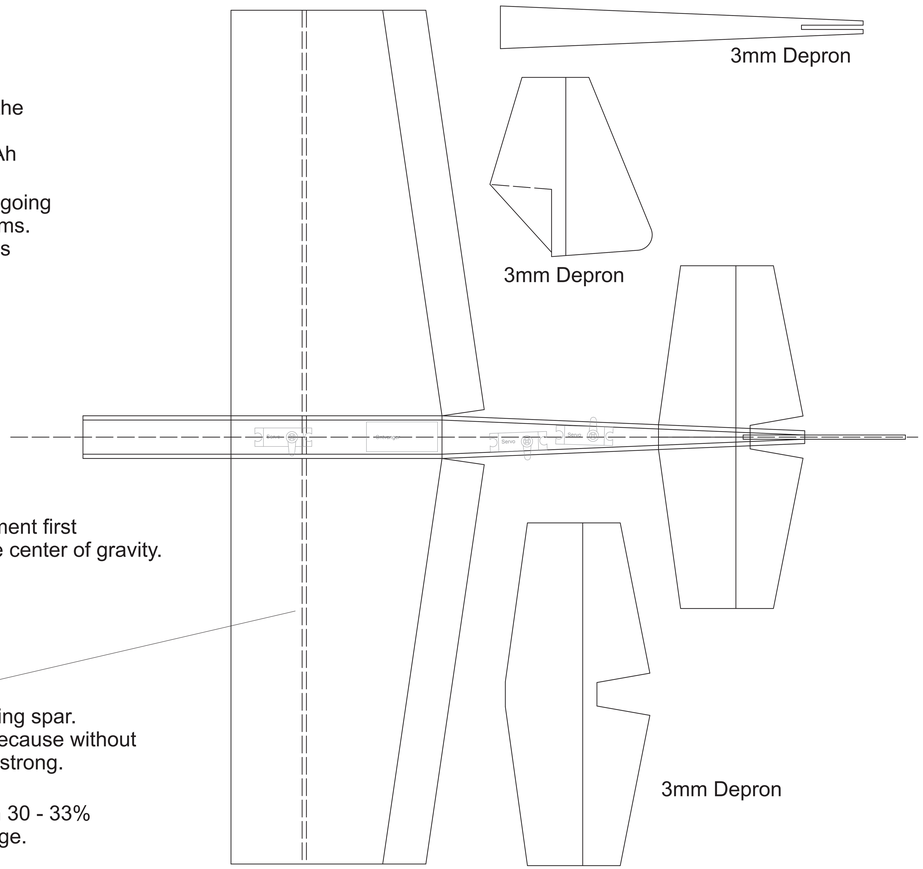

3mm Depron

3mm Depron

3mm Depron

Before installing the equipment first
tape it in place to check the center of gravity.

Balsa 3mm main wing spar.
I dind't used one, because without
it the wing was still strong.

Center of gravity on 30 - 33%
from the leading edge.

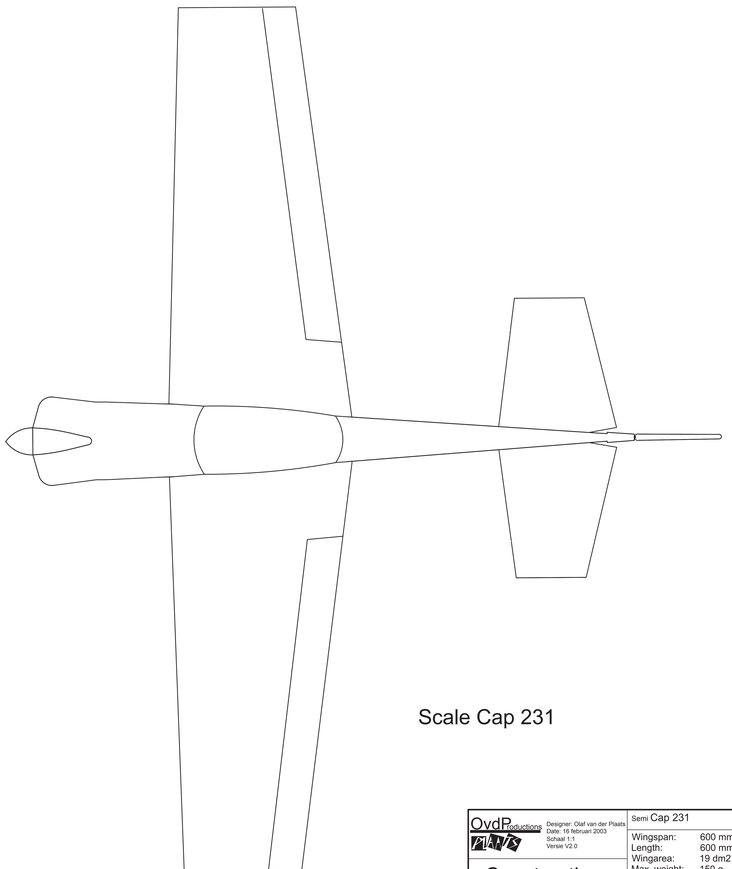

Scale Cap 231

OvdP Productions PLANS	Designer: Olaf van der Plaats Date: 16 februari 2003 Schaal 1:1 Versie V2.0	Semi Cap 231
Construction		Wingspan: 600 mm Length: 600 mm Wingarea: 19 dm2 Max. weight: 150 g Wingload: 17 g/dm2