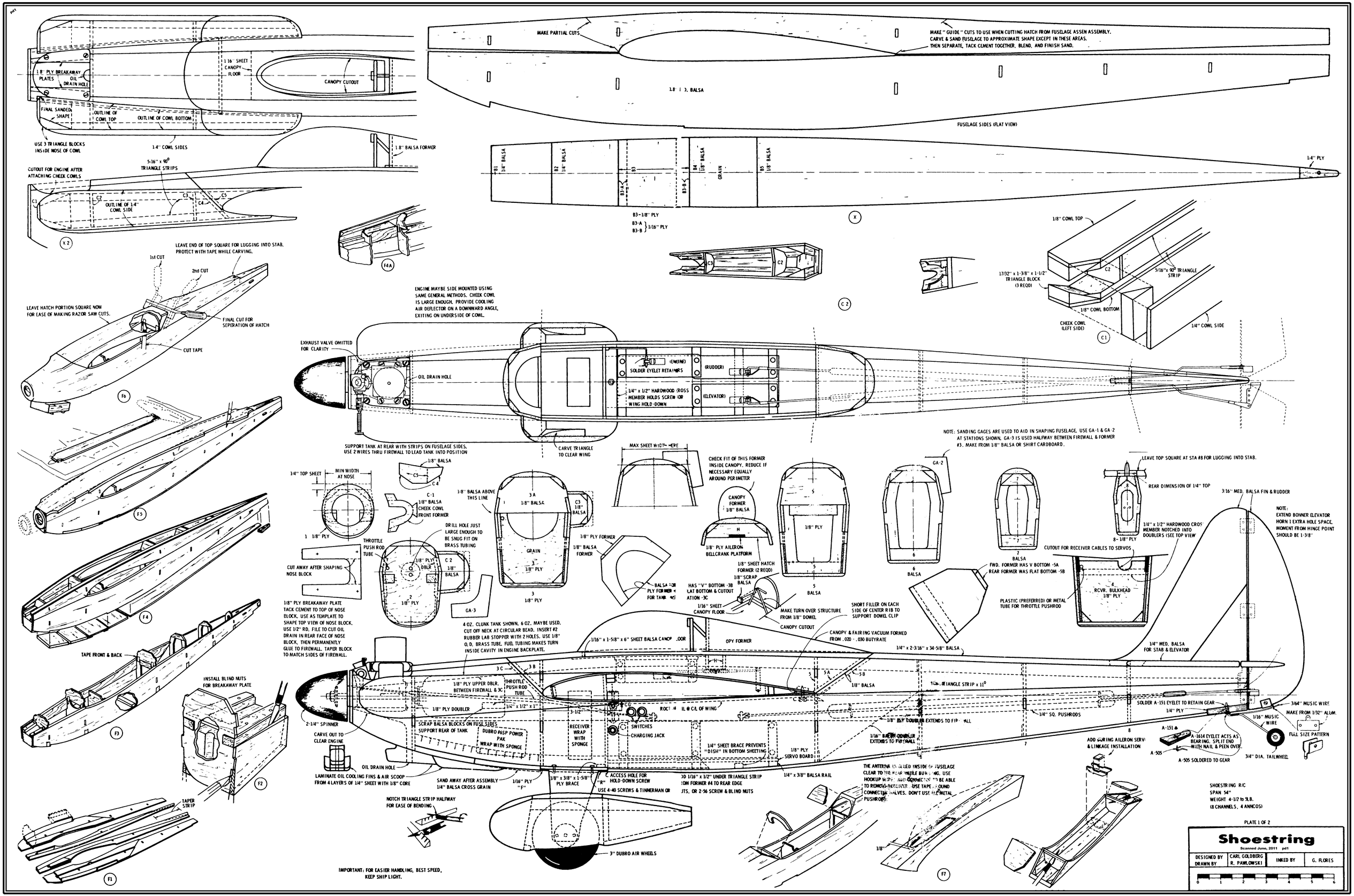
1/8" PLY BREAKAWAY PLATES
OIL DRAIN HOLE
1/16" SHEET CANOPY FLOOR
CANOPY CUTOUT
FINAL SANDED SHAPE
OUTLINE OF COWL TOP
OUTLINE OF COWL BOTTOM
USE 3 TRIANGLE BLOCKS INSIDE NOSE OF COWL
1/4" COWL SIDES
1/8" BALSA FORMER
CUTOUT FOR ENGINE AFTER ATTACHING CHEEK COWLS
5/16" x 90° TRIANGLE STRIPS
OUTLINE OF 1/4" COWL SIDE
X 2
F4A
LEAVE END OF TOP SQUARE FOR LUGGING INTO STAB. PROTECT WITH TAPE WHILE CARVING.
1st CUT
2nd CUT
LEAVE HATCH PORTION SQUARE NOW FOR EASE OF MAKING RAZOR SAW CUTS.
FINAL CUT FOR SEPERATION OF HATCH
CUT TAPE
F6
F5
F4
F3
F2
F1
TAPE FRONT & BACK
INSTALL BLIND NUTS FOR BREAKAWAY PLATE
TAPER STRIP
MAKE PARTIAL CUTS
MAKE " GUIDE " CUTS TO USE WHEN CUTTING HATCH FROM FUSELAGE ASSEN ASSEMBLY. CARVE & SAND FUSELAGE TO APPROXIMATE SHAPE EXCEPT IN THESE AREAS. THEN SEPARATE, TACK CEMENT TOGETHER, BLEND, AND FINISH SAND.
1/8" BALSA
FUSELAGE SIDES (FLAT VIEW)
B1 1/4" BALSA
B2 1/4" BALSA
B3
B3-A
B3-B
B4 1/8" BALSA
GRAIN
B5 1/8" BALSA
1/4" PLY
B3-1/8" PLY
B3-A
B3-B
1/16" PLY
X
C3
C2
C 2
1/8" COWL TOP
17/32" x 1-3/8" x 1-1/2" TRIANGLE BLOCK (3 REQD)
5/16" x 90° TRIANGLE STRIP
1/8" COWL BOTTOM
CHEEK COWL (LEFT SIDE)
1/4" COWL SIDE
C1
ENGINE MAYBE SIDE MOUNTED USING SAME GENERAL METHODS. CHEEK COWL IS LARGE ENOUGH. PROVIDE COOLING AIR DEFLECTOR ON A DOWNWARD ANGLE, EXITING ON UNDERSIDE OF COWL.
EXHAUST VALVE OMITTED FOR CLARITY
OIL DRAIN HOLE
SOLDER EYELET RETAINERS
(ENGINE)
(RUDDER)
(ELEVATOR)
1/4" x 1/2" HARDWOOD CROSS MEMBER HOLDS SCREW FOR WING HOLD-DOWN
SUPPORT TANK AT REAR WITH STRIPS ON FUSELAGE SIDES. USE 2 WIRES THRU FIREWALL TO LEAD TANK INTO POSITION
CARVE TRIANGLE TO CLEAR WING
NOTE: SANDING GAGES ARE USED TO AID IN SHAPING FUSELAGE. USE GA-1 & GA-2 AT STATIONS SHOWN. GA-3 IS USED HALFWAY BETWEEN FIREWALL & FORMER #3. MAKE FROM 1/8" BALSA OR SHIRT CARDBOARD.
1/4" TOP SHEET
MIN WIDTH AT NOSE
1/8" BALSA
C5
C4
C-1 1/8" BALSA CHEEK COWL FRONT FORMER
1 1/8" PLY
CUT AWAY AFTER SHAPING NOSE BLOCK
THROTTLE PUSH ROD TUBE
DRILL HOLE JUST LARGE ENOUGH TO BE SNUG FIT ON BRASS TUBING
1/8" PLY DBLR
C 2 1/8" BALSA
2 1/8" PLY
GA-3
1/8" BALSA ABOVE THIS LINE
3 A 1/8" BALSA
C3 1/8" BALSA
GRAIN
3 1/8" PLY
1/8" PLY FORMER
1/8" BALSA FORMER
BALSA FORMER FOR TANK
MAX SHEET WIDTH HERE
CHECK FIT OF THIS FORMER INSIDE CANOPY. REDUCE IF NECESSARY EQUALLY AROUND PERIMETER
CANOPY FORMER 1/8" BALSA
H
1/8" PLY AILERON BELLCRANK PLATFORM
1/8" SHEET HATCH FORMER (2 REQD)
1/8" SCRAP BALSA
HAS "V" BOTTOM -3B
LAT BOTTOM & CUTOUT ATION -3C
1/16" SHEET CANOPY FLOOR
MAKE TURN OVER STRUCTURE FROM 1/8" DOWEL
CANOPY CUTOUT
SHORT FILLER ON EACH SIDE OF CENTER RIB TO SUPPORT DOWEL CLIP
1/8" PLY
5 BALSA
GA-2
6 BALSA
7 BALSA
FWD. FORMER HAS V BOTTOM -5A
REAR FORMER WAS FLAT BOTTOM -5B
LEAVE TOP SQUARE AT STA #8 FOR LUGGING INTO STAB.
REAR DIMENSION OF 1/4" TOP
8 1/8" PLY
1/4" x 1/2" HARDWOOD CROSS MEMBER NOTCHED INTO DOUBLERS (SEE TOP VIEW
CUTOUT FOR RECEIVER CABLES TO SERVOS
PLASTIC (PREFERRED) OR METAL TUBE FOR THROTTLE PUSHROD
RCVR. BULKHEAD 1/8" PLY
3/16" MED. BALSA FIN & RUDDER
NOTE: EXTEND BONNER ELEVATOR HORN 1 EXTRA HOLE SPACE. MOMENT FROM HINGE POINT SHOULD BE 1-3/8"
1/8" PLY BREAKAWAY PLATE TACK CEMENT TO TOP OF NOSE BLOCK. USE AS TEMPLATE TO SHAPE TOP VIEW OF NOSE BLOCK. USE 1/2" RD. FILE TO CUT OIL DRAIN IN REAR FACE OF NOSE BLOCK, THEN PERMANENTLY GLUE TO FIREWALL. TAPER BLOCK TO MATCH SIDES OF FIREWALL.
4 OZ. CLUNK TANK SHOWN. 6 OZ. MAYBE USED. CUT OFF NECK AT CIRCULAR BEAD. INSERT #2 RUBBER LAB STOPPER WITH 2 HOLES. USE 1/8" O.D. BRASS TUBE. FUEL TUBING MAKES TURN INSIDE CAVITY IN ENGINE BACKPLATE.
1/16" x 1-5/8" x 6" SHEET BALSA CANOPY FLOOR
OPY FORMER
1/4" x 2-3/16" x 34-5/8" BALSA
1/4" MED. BALSA FOR STAB & ELEVATOR
3 C
3 B
5
5A
5B
1/8" BALSA
1/8" PLY UPPER DBLR. BETWEEN FIREWALL & 3C
THROTTLE PUSH ROD TUBE
1/8" PLY DOUBLER
1/4" x 1/2" x 1
3-1/2"
CG
ROCKET IL @ C/L OF WING
SWITCHES
CHARGING JACK
RECEIVER WRAP WITH SPONGE
SCRAP BALSA BLOCKS ON FUSE SIDES SUPPORT REAR OF TANK
DUBRO #6SP POWER PAK WRAP WITH SPONGE
2-1/4" SPINNER
CARVE OUT TO CLEAR ENGINE
OIL DRAIN HOLE
LAMINATE OIL COOLING FINS & AIR SCOOP FROM 4 LAYERS OF 1/4" SHEET WITH 1/8" CORE
SAND AWAY AFTER ASSEMBLY 1/4" BALSA CROSS GRAIN
1/16" PLY "F"
1/8" x 3/8" x 1-5/8" PLY BRACE
"R"
ACCESS HOLE FOR HOLD-DOWN SCREW
USE 4-40 SCREWS & TINNERMAN OR
1/4" SHEET BRACE PREVENTS "DISH" IN BOTTOM SHEETING
1/8" PLY SERVO BOARD
1/4" x 3/8" BALSA RAIL
1/8" BALSA DOUBLER EXTENDS TO FIREWALL
1/8" BALSA DOUBLER EXTENDS TO FIREWALL
1/4" SQ. PUSHRODS
SOLDER A-151 EYELET TO RETAIN GEAR
1/4" PLY
3/64" MUSIC WIRE
MAKE FROM 1/32" ALUM.
1/16" MUSIC WIRE
FULL SIZE PATTERN
A-151
A-1614 EYELET ACTS AS BEARING. SPLIT END WITH NAIL & PEEN OVER.
A-505
A-505 SOLDERED TO GEAR
3/4" DIA. TAILWHEEL
ADD SPRING AILERON SERVO & LINKAGE INSTALLATION
THE ANTENNA IS SLIDED INSIDE OF FUSELAGE CLEAR TO THE REAR WHILE BUILDING. USE HOOKUP WIRE AND CONNECTORS TO BE ABLE TO REMOVE RECEIVER. USE TAPE AROUND CONNECTOR SLIVES. DON'T USE ALL METAL PUSHRODS.
NOTCH TRIANGLE STRIP HALFWAY FOR EASE OF BENDING
3" DUBRO AIR WHEELS
IMPORTANT: FOR EASIER HANDLING, BEST SPEED, KEEP SHIP LIGHT.
SHOESTRING R/C
SPAN 54"
WEIGHT 4-1/2 to 5LB.
(8 CHANNELS, 4 ANNCOS)
PLATE 1 OF 2
Shoestring
Scanned June, 2011 pd1
DESIGNED BY CARL GOLDBERG
DRAWN BY R. PAWLOWSKI
INKED BY G. FLORES
0 1 2 3 4 5 6

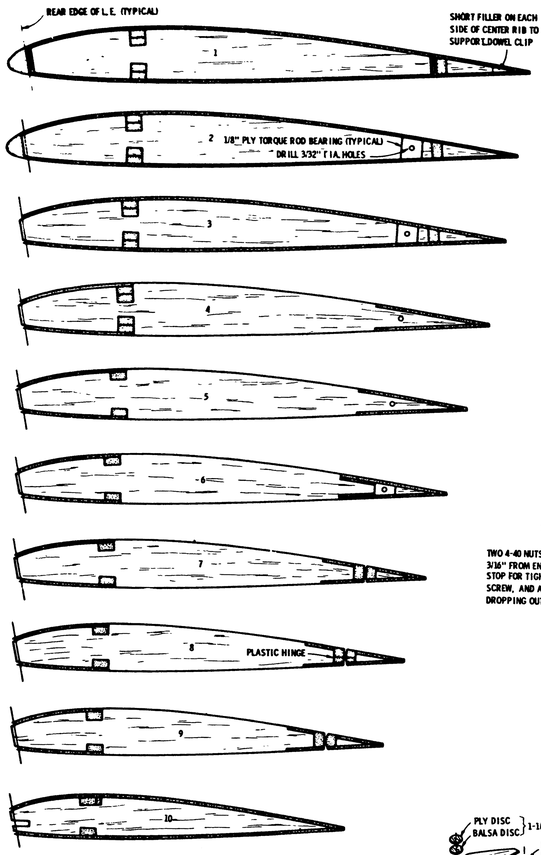

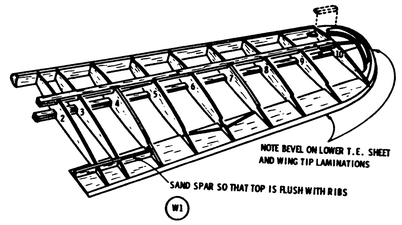

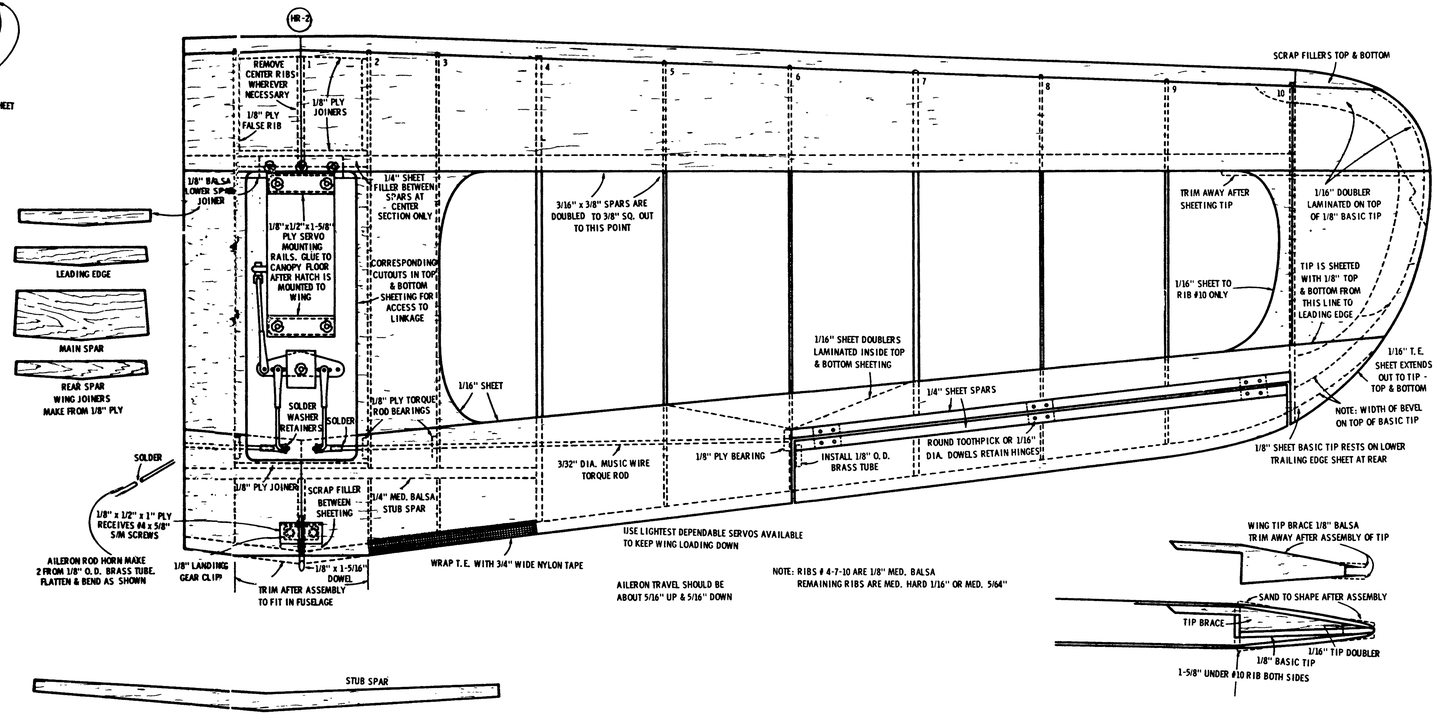

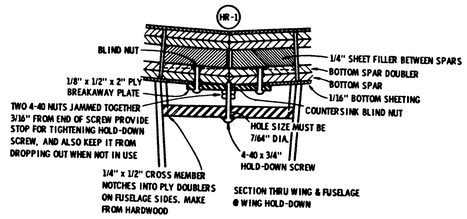

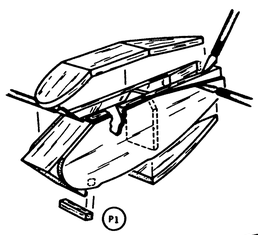

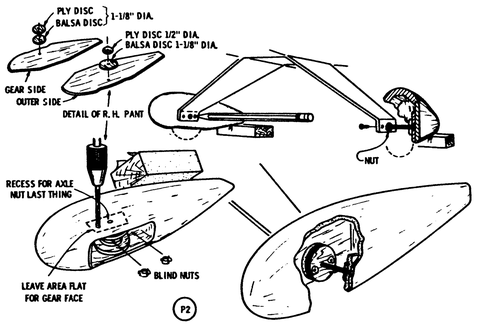

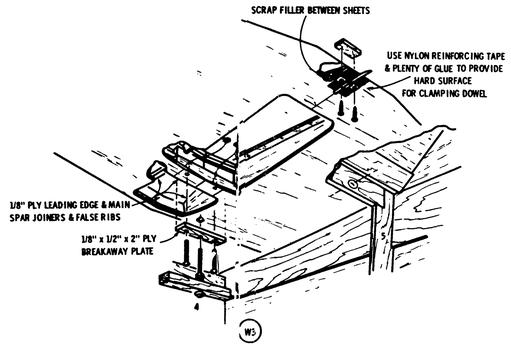

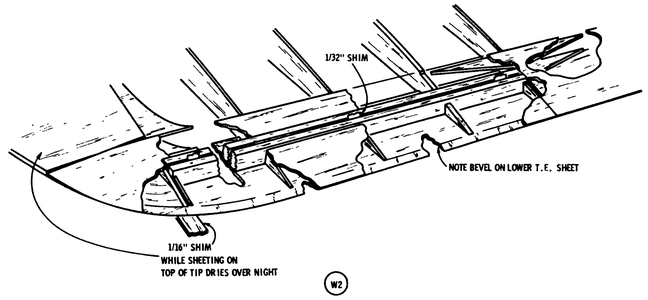

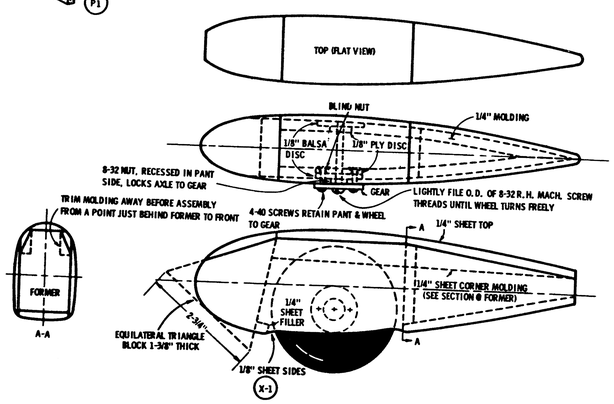

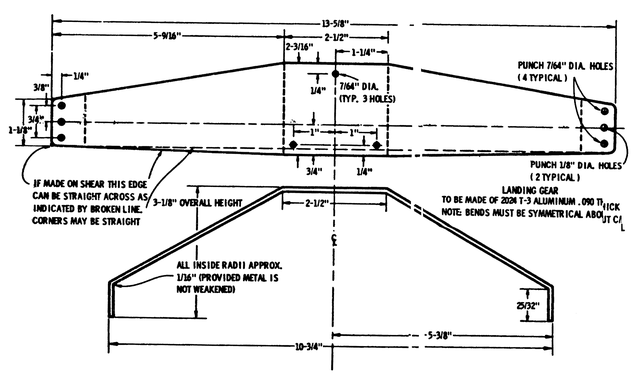

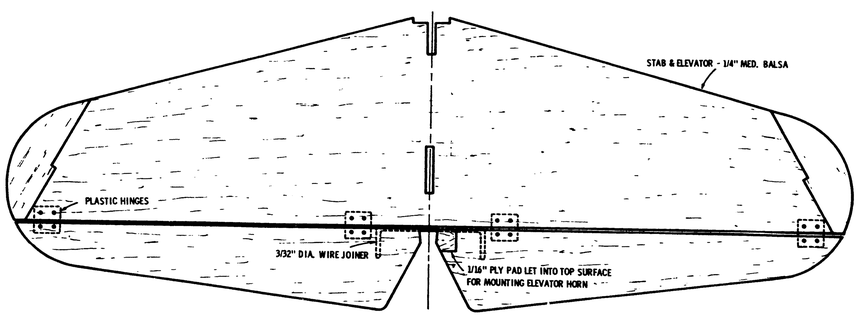

PLATE 2 OF 2

Shoestring

Scanned June, 2011 pd1

DESIGNED BY / DRAWN BY	CARL GOLDBERG / R. PAWLOWSKI	INKED BY	G. FLORES

0 1 2 3 4 5 6